AUDIO-VIDEO STEREO RECEIVER

# KR-694/V5560/V6060

# SERVICE MANUAL

KENWOOD

© 1994-1 PRINTED IN JAPAN
B51-4842-00(S) 3457

## KR-V5560(KR-694 sames as KR-V5560 without Model name.)

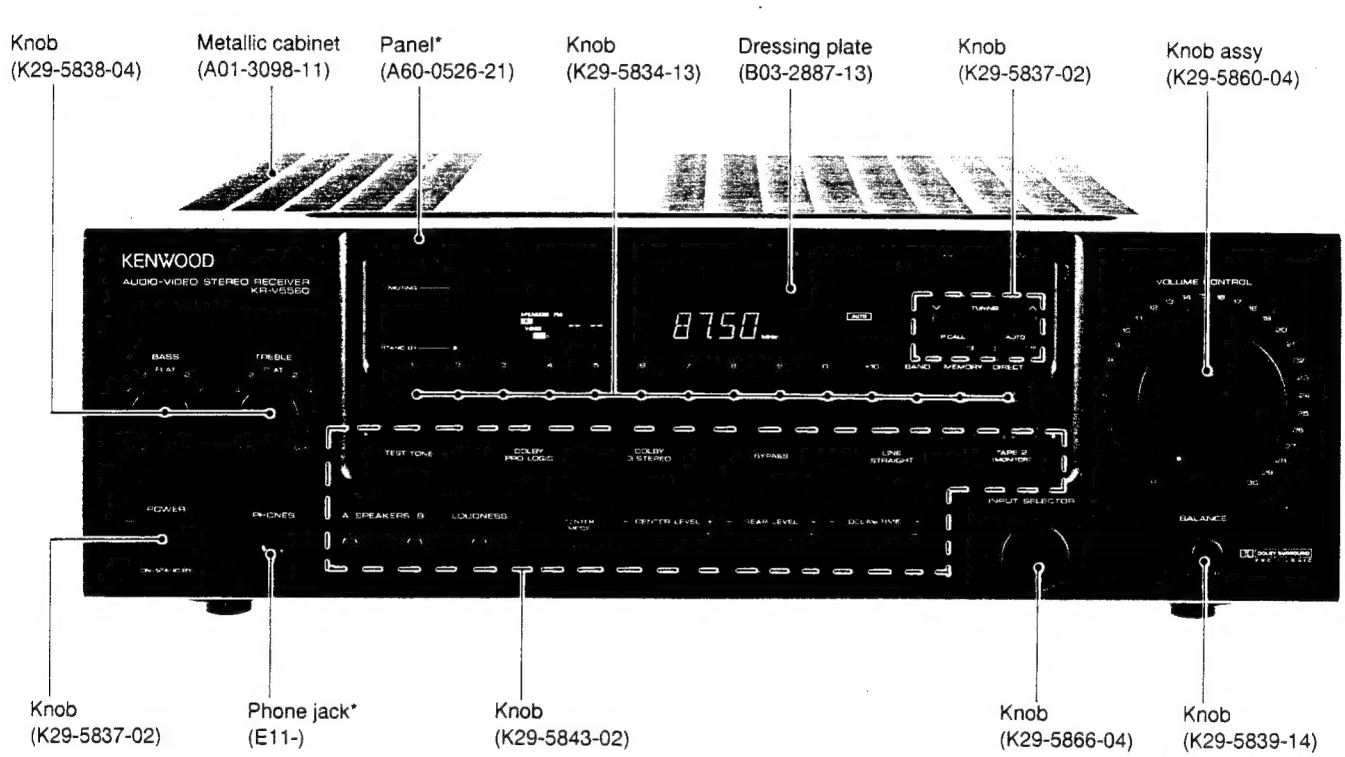


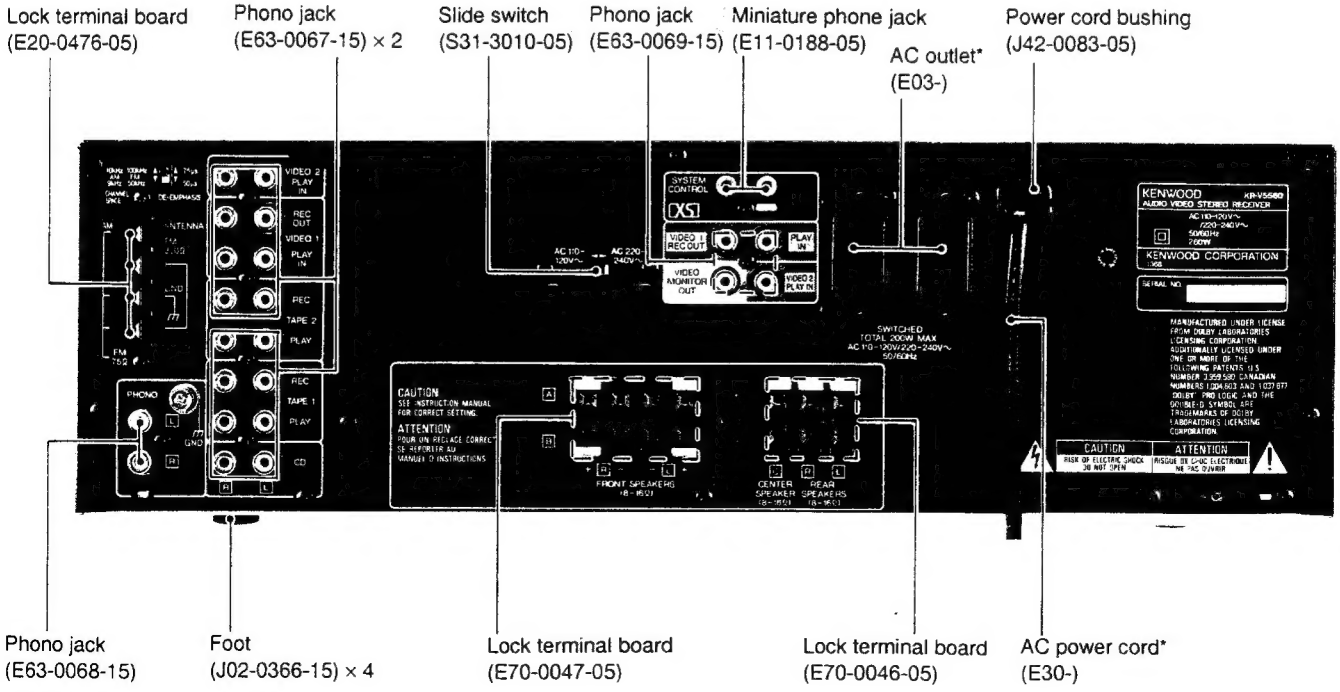


*Refer to parts list on page 51.

# KR-694/V5560/V6060

## CONTENTS


ACCESSORIES ..... 2
REMOTE CONTROL UNIT ..... 5
DISASSEMBLY FOR REPAIR ..... 8
BLOCK DIAGRAM ..... 9
CIRCUIT DESCRIPTION ..... 11
ADJUSTMENT ..... 20
WIRING DIAGRAM ..... 23
PC BOARD(Component side view) ..... 25
SCHEMATIC DIAGRAM ..... 33
EXPLODED VIEW ..... 49
PARTS LIST ..... 51
SPECIFICATIONS ..... 62


## ACCESSORIES

FM indoor antenna .....(1)
(T90-0175-05)

AC plug adaptor
.....(1)
(E03-0115-05):M

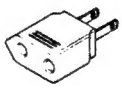

Remote control unit .....(1)
[KR-694,V5560]
A60-0964-05
BATTERY COVER : A09-0170-08

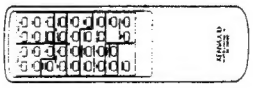

AM loop antenna Assy.....(1)
(T90-0195-05)

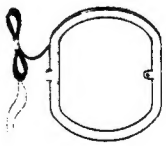

Loop antenna stand
(J19-3645-05)

Batteries (R6/AA) .....(2)

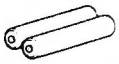

Antenna adaptor(75Ω/300Ω)
..... (1)
(T90-0185-05):E,T

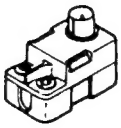

[KR-V6060]
A70-0962-05 : K,P,Y,M,R
A70-0963-05 : E,T
BATTERY COVER : A09-0146-08

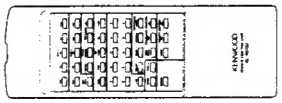

## KR-V6060 M type (Except E,T type)

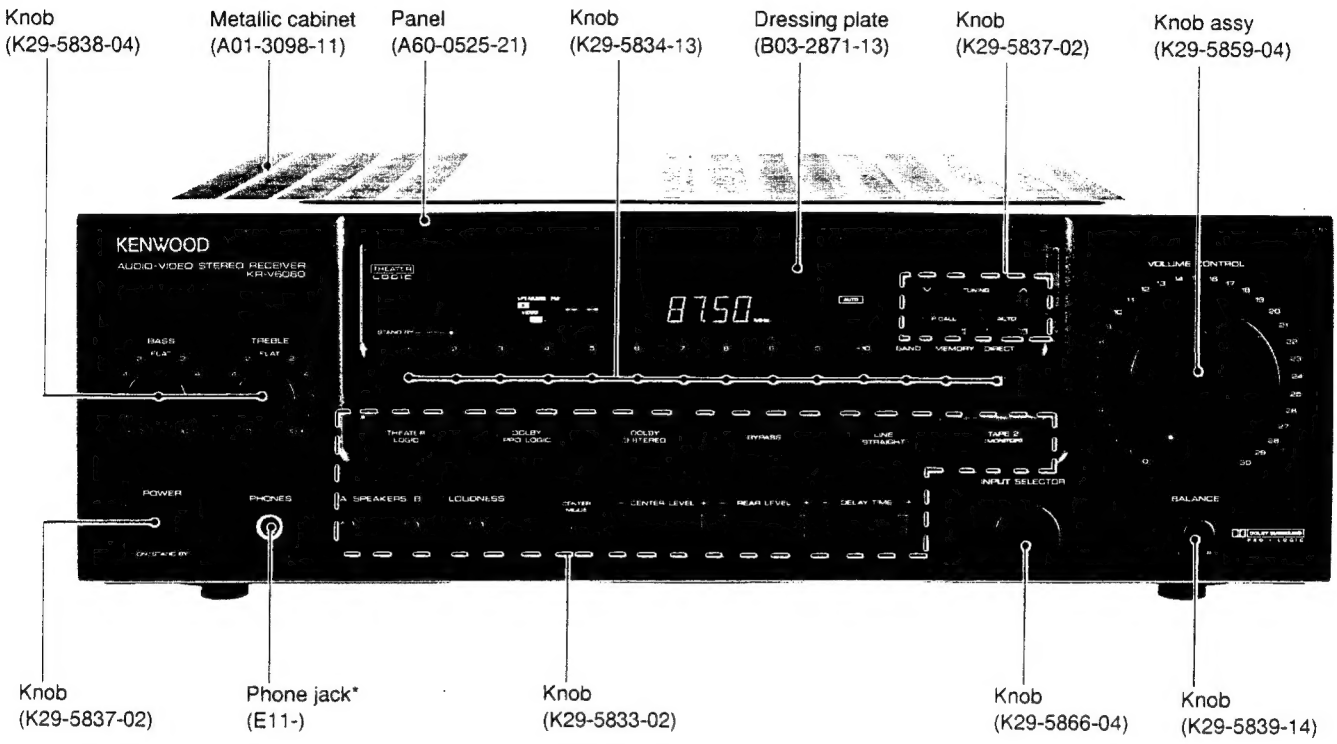


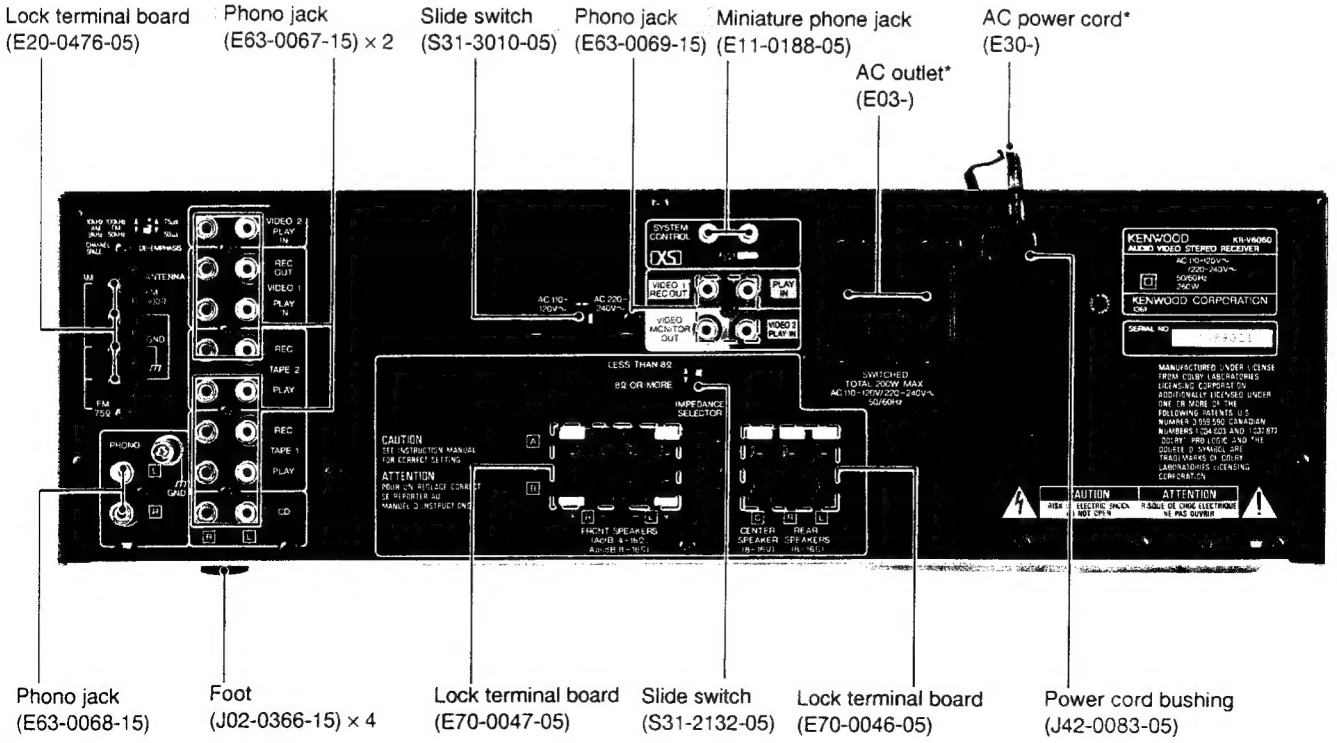


*Refer to parts list on page 51.

# KR-694/V5560/V6060

## KR-V6060(E,T Type)

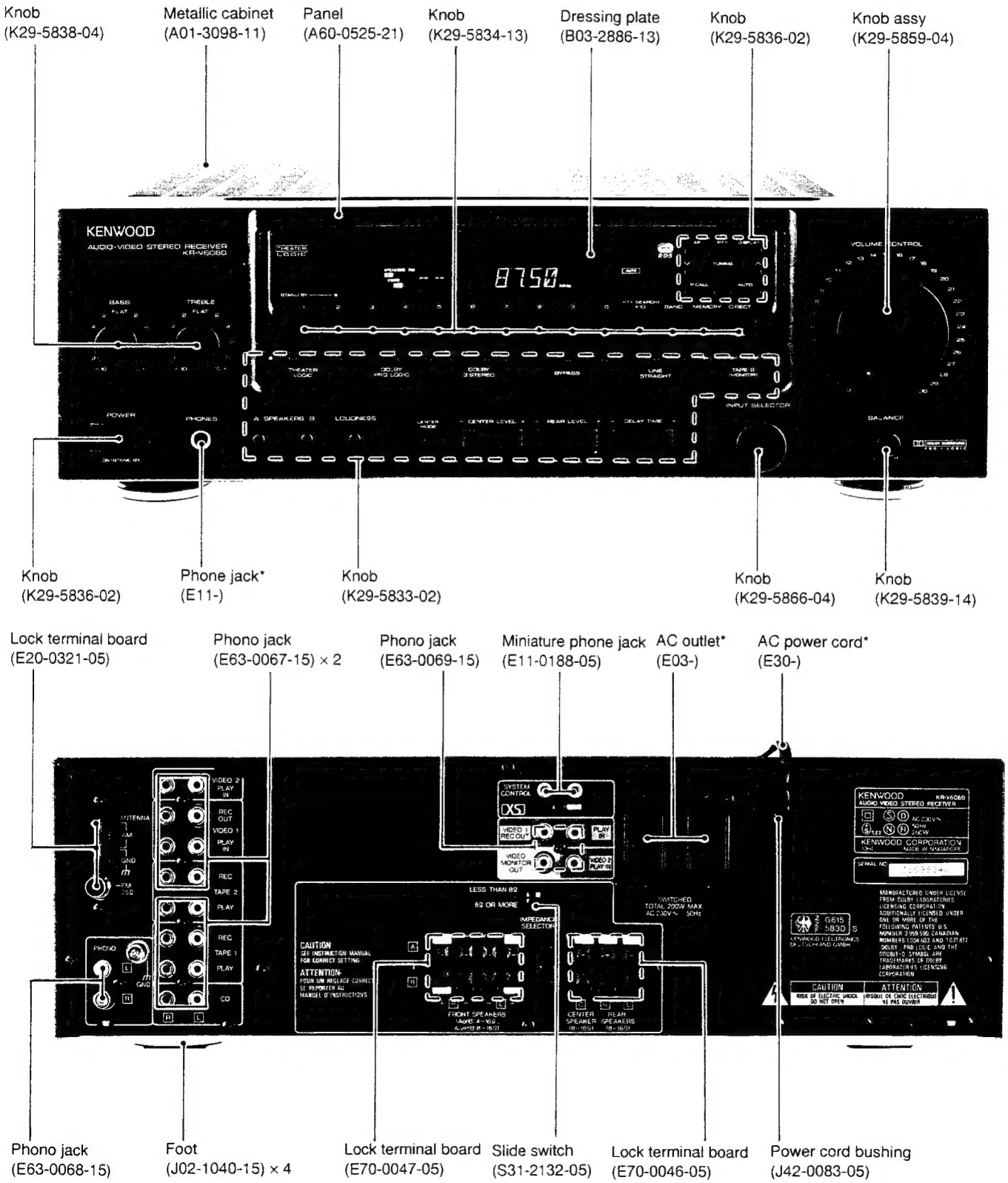


*Refer to parts list on page 51.

# KR-694/V5560/V6060

## REMOTE CONTROL UNIT

**KR-694/V5560**

**TUNER operation keys**
BAND Selects the broadcast band.
P.CALL Recalls preset stations.

**CD player operation keys**
DISC This key is used as the disc selector of a multi-CD player. Each press selects a different disc.

**INPUT key**
Selects the input sources.
**TAPE 2 (MONITOR) key**
Press to monitor the source being recorded.

**POWER key**

**MUTE key**
Mutes the sound temporarily.
**VOLUME keys**
Adjust the listening volume. The VOLUME CONTROL knob of the main unit turns when these keys are operated.

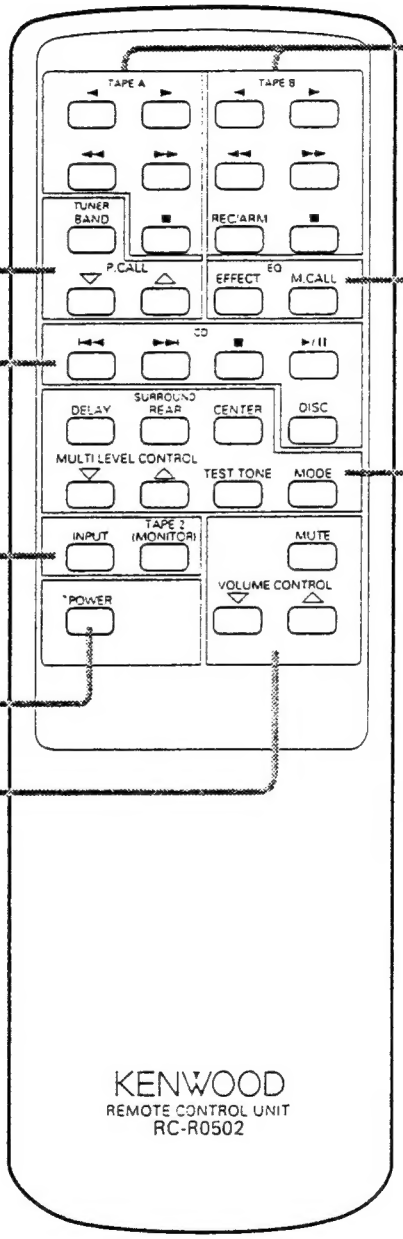


**Cassette deck operation keys**
These keys are used to operate TAPE A and TAPE B decks.
**REC/ARM key**
When recording on TAPE B, puts the deck in record-pause mode after leaving a non-recorded blank of 4 seconds.

**Graphic equalizer operation keys**
EFFECT Turns the graphic equalizer ON and OFF.
M.CALL Recalls the preset equalizer curves from memory.

**SURROUND keys**
SURROUND MODE
Switches the surround modes.
TEST TONE
Switches the test tone ON and OFF.
CENTER + MULTI LEVEL CONTROL
This combination adjusts the center level.
REAR + MULTI LEVEL CONTROL
Adjusts the rear level.
DELAY + MULTI LEVEL CONTROL
Adjusts the delay time.

# KR-694/V5560/V6060

## REMOTE CONTROL UNIT

**KR-V6060 ( Except E,T type)**

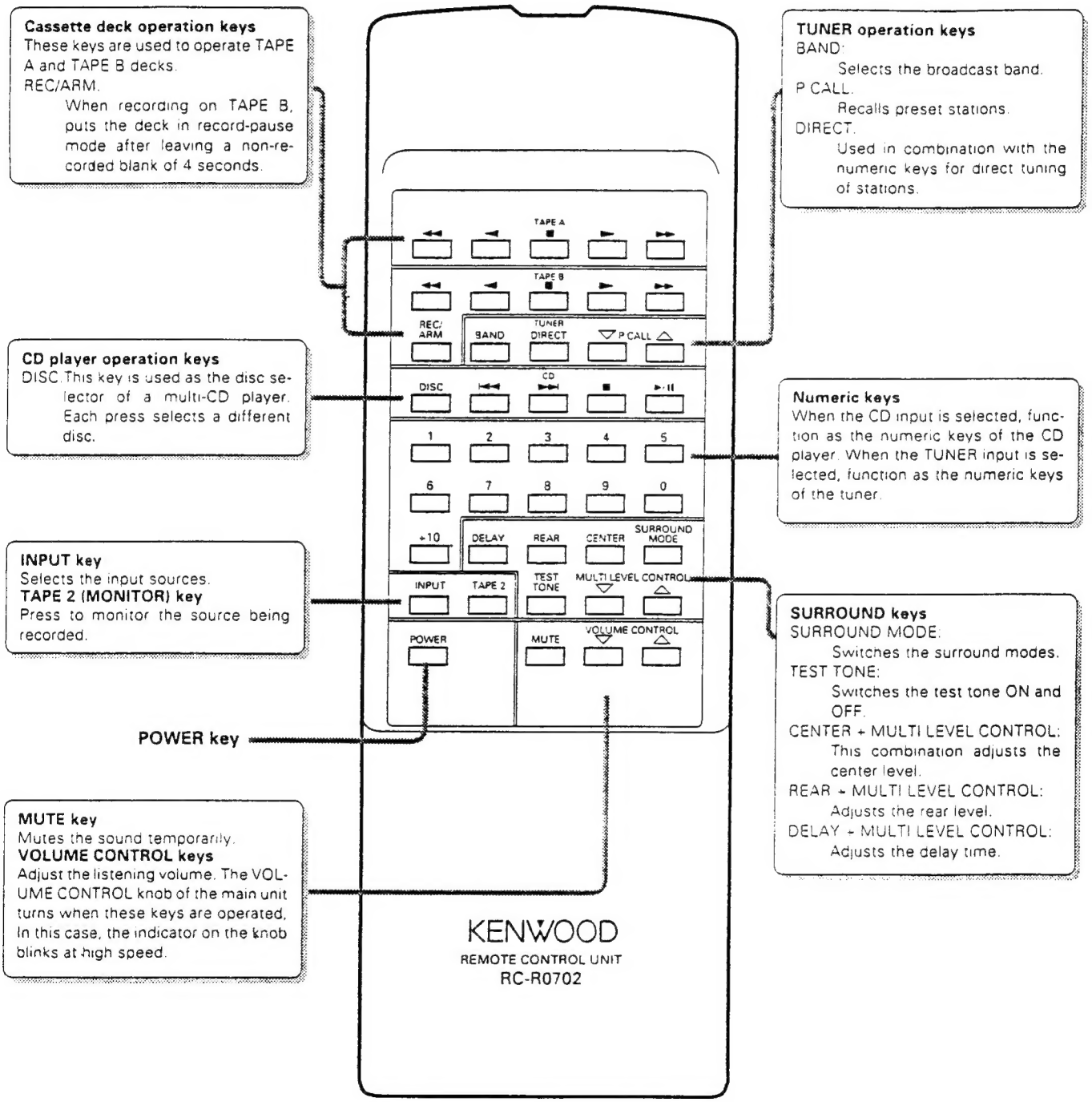

# KR-694/V5560/V6060

## REMOT CONTROL UNIT

### KR-V6060 (E,T type)

**Graphic equalizer operation keys**
EFFECT:
Turns the graphic equalizer ON and OFF.
M.CALL:
Recalls the preset equalizer curves from memory.

**CD player operation keys**
DISC: This key is used as the disc selector of a multi-CD player. Each press selects a different disc.

**SURROUND keys**
SURROUND MEMORY:
Surround play data can be registered under these keys.
SURROUND MODE:
Switches the surround modes.
TEST TONE:
Switches the test tone ON and OFF.
CENTER + MULTI LEVEL CONTROL:
This combination adjusts the center level.
REAR + MULTI LEVEL CONTROL:
Adjusts the rear level.
DELAY + MULTI LEVEL CONTROL:
Adjusts the delay time.

**POWER key**

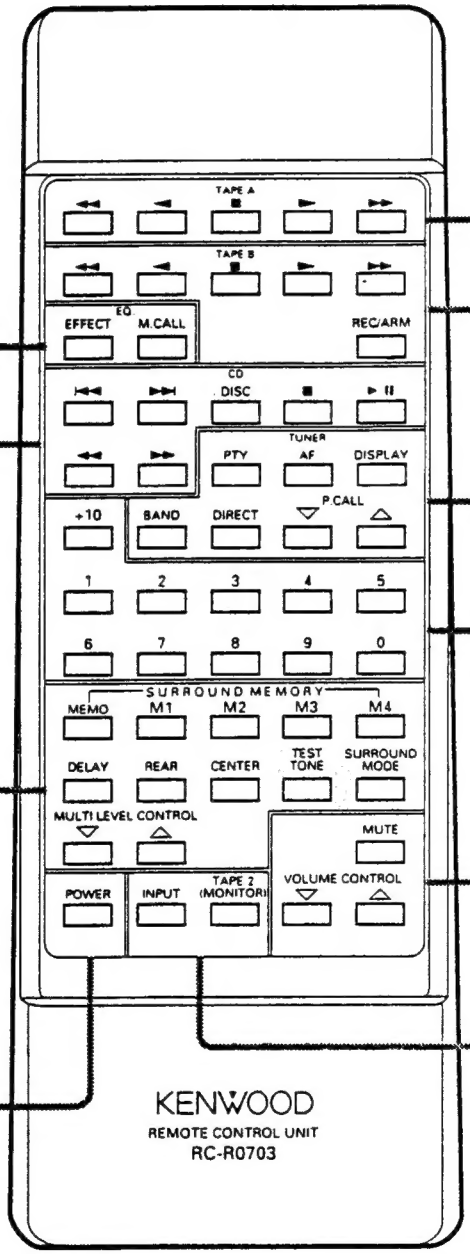


**Cassette deck operation keys**
These keys are used to operate TAPE A and TAPE B decks.
**REC/ARM key**
When recording on TAPE B, puts the deck in record-pause mode after leaving a non-recorded blank of 4 seconds.

**TUNER operation keys**
BAND:
Selects the broadcast band.
P.CALL:
Recalls preset stations.
DIRECT:
Used in combination with the numeric keys for direct tuning of stations.
PTY/AF/DISPLAY:
Used in reception of RDS broadcasting.

**Numeric keys**
When the CD input is selected, function as the numeric keys of the CD player. When the TUNER input is selected, function as the numeric keys of the tuner.

**MUTE key**
Mutes the sound temporarily.
**VOLUME CONTROL keys**
Adjust the listening volume. The VOLUME CONTROL knob of the main unit turns when these keys are operated. In this case, the indicator on the knob blinks at high speed.

**INPUT key**
Selects the input sources.
**TAPE 2 (MONITOR) key**
Press to monitor the source being recorded.

# KR-694/V5560/V6060

## DISASSEMBLY FOR REPAIR

Remove the upper case in advance.

**1. How to remove the front panel**

Remove the four screws (❶) at the bottom of the front panel and the volume knob and nut. Remove the panel forward while removing the Balance knob (❷) the left and right tabs (❸).

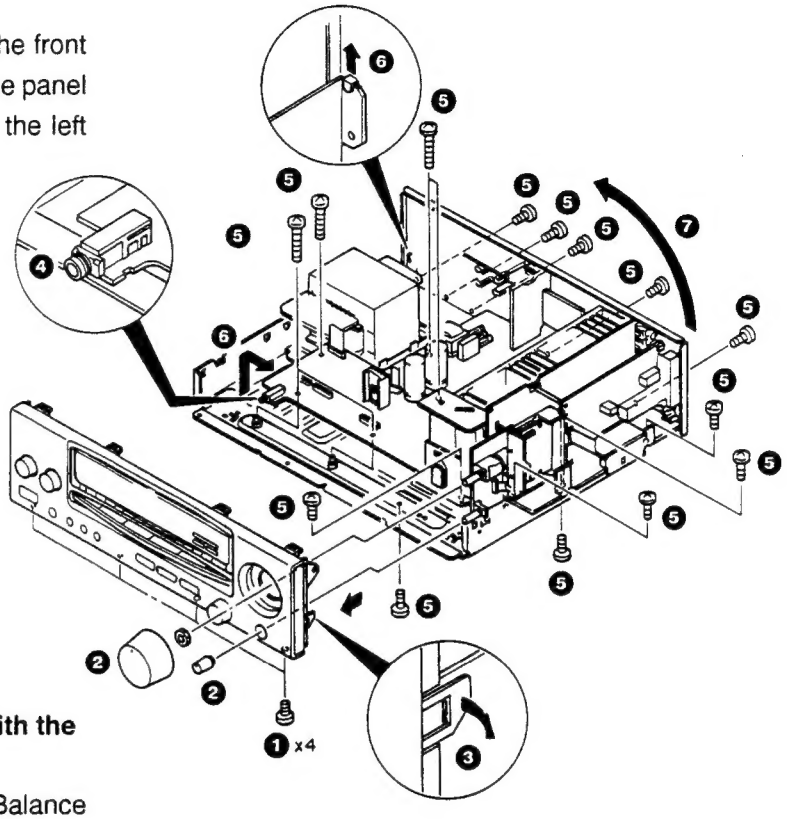


**2. How to remove the main circuit board (with the front panel attached)**

Remove the Volume knob and nut, and the Balance knob (❷). Next remove the 16 screws (❸) and remove the main PCB from the main chassis.

When removing, lift up the main PCB, move it right, lift it up in direction (❼) while being careful not to contact the transformer PCB, and stand it up as shown in the diagram below.

If the main PCB is unstable, insert a spacer (❽) as needed near the PHONES jack.

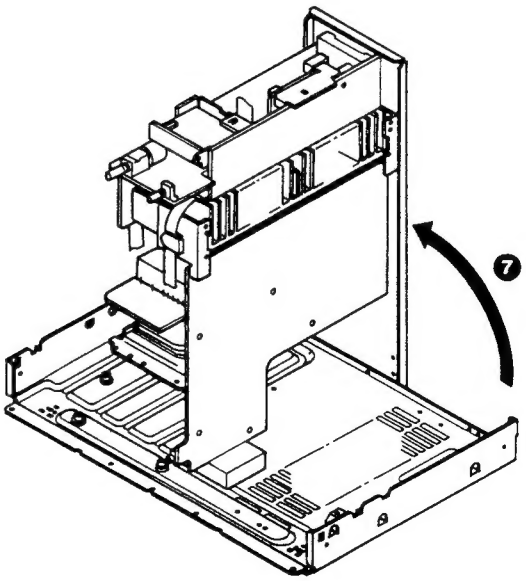

 KR-694/V5560/V6060

# BLOCK DIAGRAM

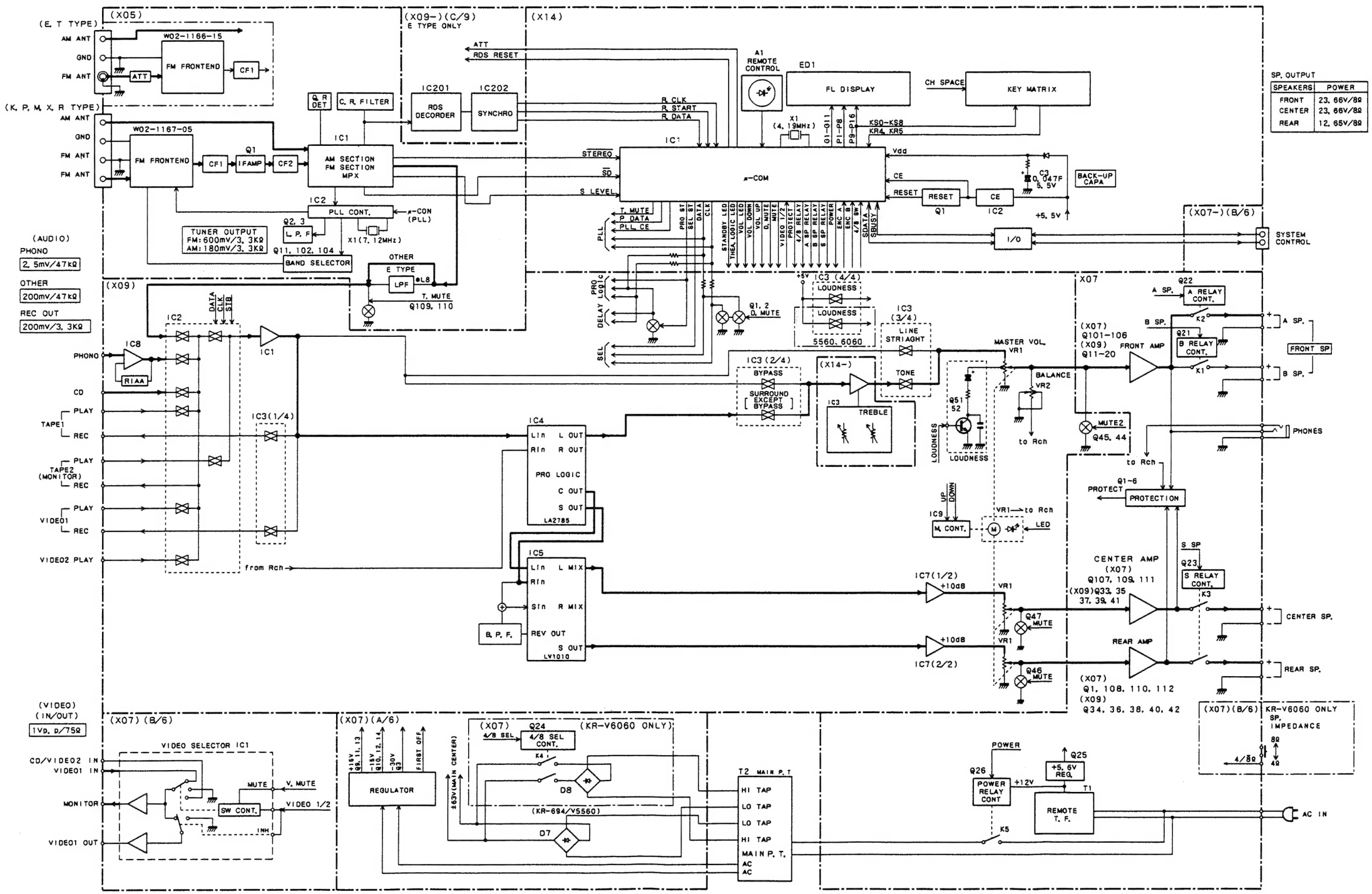

# KR-694/V5560/V6060
# CIRCUIT DESCRIPTION

## 1. Function description

### TUNER

| | KR-694 | KR-V5560 | KR-V6060 | KR-V7060 | KR-V8060 |
|---|---|---|---|---|---|
| 20 ch RANDOM PRESET | ○ | ○ | ○ | ○ | ○ |
| Tuning control by IF count | ○ | ○ | ○ | ○ | ○ |
| Direct selection | ○ | ○ | ○ | ○ | ○ |
| RDS function (E, T type only) | | | ○ | ○ | |

○: FUNCTION NO mark: NO FUNCTIOIN

### AMP

| | KR-694 | KR-V5560 | KR-V6060 | KR-V7060 | KR-V8060 |
|---|---|---|---|---|---|
| ① INPUT SELECTOR<br>TAPE 2 ON<br>TAPE 2 OFF<br>{ CD, TUNER, PHONO, TAPE 1, VIDEO 1, VIDEO 2 } | ○ | ○ | ○ | ○ | ○ |
| ② VIDEO SELECTOR<br>VIDEO 1<br>VIDEO 2 | ○ | ○ | ○ | ○ | ○ |
| ③ LINE STRAIGHT | ○ | ○ | ○ | ○ | |
| ④ SURROUND MODE: PRO LOGIC(NOR, WIDE, PHANTOM)<br>3 STEREO | ○ | ○ | ○ | ○ | ○ |
| ④ SURROUND MODE: THEATER LOGIC | | | ○ | ○ | |
| ④ SURROUND MODE: DSP LOGIC<br>DSP { ARENA, JAZZ CLUB, STADIUM } | | | | | ○ |
| ⑤ SURROUND MEMORY (M1 ~ M4)<br>SURROUND MODE<br>CENTER MODE<br>DELAY TIME<br>CENTER LEVEL | | | ○<br>(E, T type only) | ○<br>(E, T type only) | |
| ⑥ SPEAKER A/B SELECT | ○ | ○ | ○ | ○ | ○ |
| ✳ ⑦ IMPEADANC SELECTOR (4/8Ω) | | | ○<br>(AUTO) | ○<br>(MANUAL) | ○<br>(MANUAL) |

○: FUNCTION No Mark: NO FUNCTION

# KR-694/V5560/V6060

## CIRCUIT DESCRIPTION

### ⁎⑦ INPEDANCE SELECTOR (4/8 Ω)

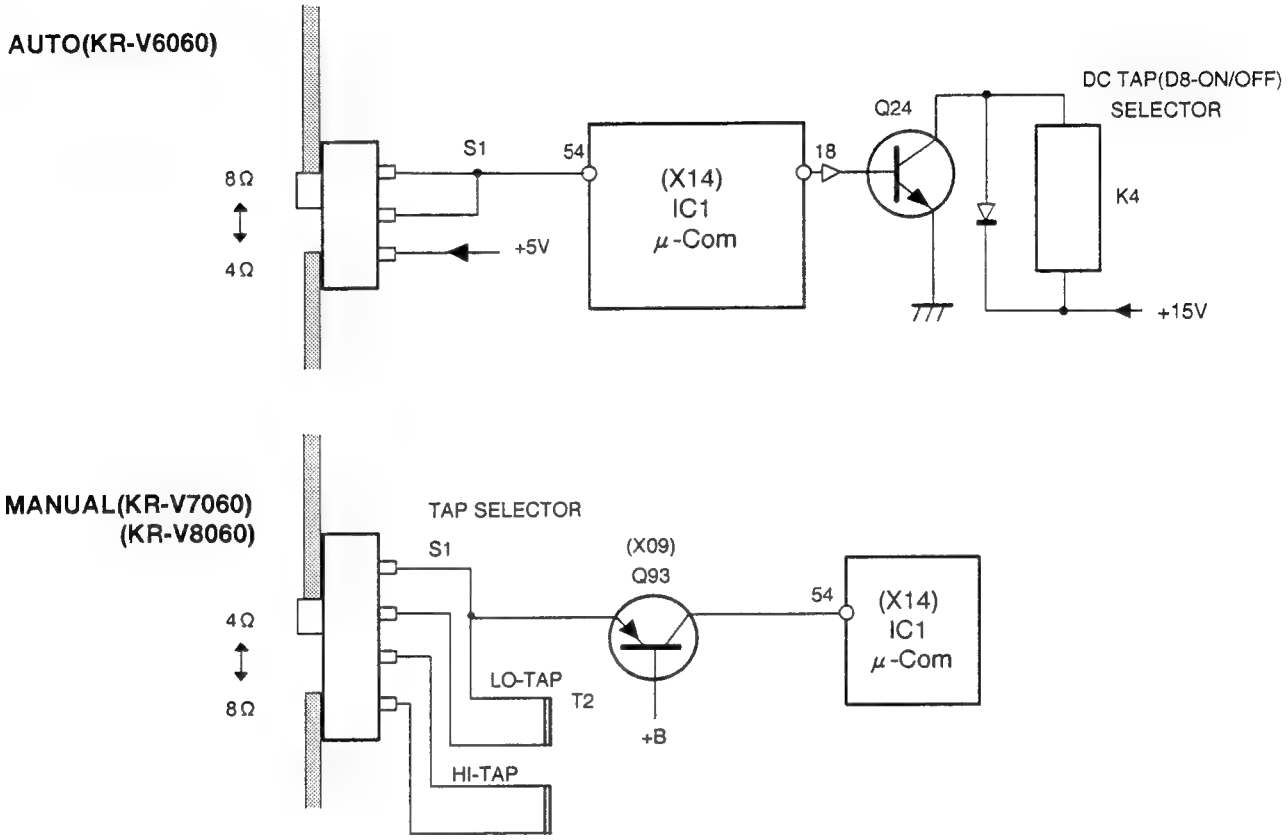


**AUTO (KR-V6060 only)**

**Speaker IMPEDANCE SELECTOR**

Set the IMPEDANCE SELECTOR switch on the rear panel according to the impedance of the front speakers used. The center and rear speakers should have impedances from 8 to 16 ohms regardless of the position of this switch.

| For surround play | | For non-surround play | |
|---|---|---|---|
| Front speaker impedance | Selector position | Front speaker impedance | Selector position |
| A or B speakers 4Ω ~ 6Ω | LESS THAN 8Ω / 8Ω OR MORE — IMPEDANCE SELECTOR | A or B speakers 4Ω ~ 6Ω | LESS THAN 8Ω / 8Ω OR MORE — IMPEDANCE SELECTOR |
| A or B speakers 8Ω ~ 16Ω | LESS THAN 8Ω / 8Ω OR MORE — IMPEDANCE SELECTOR | A or B speakers 8Ω ~ 16Ω<br>A and B speakers 8Ω ~ 16Ω | LESS THAN 8Ω / 8Ω OR MORE — IMPEDANCE SELECTOR |

- It is not possible to use both A and B speaker systems for surround play.
- It is not possible to use both A and B speaker systems if speakers have impedances from 4 ohms to 6 ohms.

# CIRCUIT DESCRIPTION

## 2. Conditions according to the destination and model

### TUNER

| Destination | DIODE SW | | | BAND | Receiving Remarks | Channel Space | IF | Reference Frequency |
|---|---|---|---|---|---|---|---|---|
| | DSW2 D33 | DSW1 D34 | DSW0 D35 | | | | | |
| K1 (1700) | 0 | 0 | 0 | FM | 87.5 MHz ~ 108.0 MHz | 100 kHz | + 10.7 MHz | 50 kHz |
| | | | | AM | 530 kHz ~ 1700 kHz | 10 kHz | + 450 kHz | 10 kHz |
| K2 (1610) | 0 | 0 | 1 | FM | 87.5 MHz ~ 108.0 MHz | 100 kHz | + 10.7 MHz | 50 kHz |
| | | | | AM | 530 kHz ~ 1610 kHz | 10 kHz | + 450 kHz | 10 kHz |
| E1 | 0 | 1 | 1 | FM | 87.5 MHz ~ 108.0 MHz | 50 kHz | + 10.7 MHz | 50 kHz |
| | | | | AM | 531 kHz ~ 1602 kHz | 9 kHz | + 450 kHz | 9 kHz |
| E3 (RDS) | 1 | 0 | 1 | FM | 87.5 MHz ~ 108.0 MHz | 50 kHz | + 10.7 MHz | 50 kHz |
| | | | | AM | 531 kHz ~ 1602 kHz | 9 kHz | + 450 kHz | 9 kHz |
| M | 0 | X | 1 | K2/E1 changes by only setting "DSW1". (DSW1 = 0: K2 Type, 1: E1 type) | | | | |

* DIODE SW (DSWX): 0 = Without DIODE (when static, input LOW)
1 = With DIODE (when static, input HIGH)
X = TRANSISTOR SW (0 = OFF 1 = ON)

### AMP

| MODEL | DIODE SW | DSW 4 | DSW 3 | Surround function | IMPEDANCE SELECTOR (4/8Ω) |
|---|---|---|---|---|---|
| | Ref. No. | D31 | D32 | | |
| KR-694/V5560 | | 0 | 0 | PRO-LOGIC, 3 STEREO | |
| KR-V6060 | | 0 | 1 | PRO-LOGIC, 3 STEREO, THEATER LOGIC | AUTO |
| KR-V7060 | | 1 | 0 | PRO-LOGIC, 3 STEREO, THEATER LOGIC | MANUAL |
| KR-V8060 | | 1 | 1 | PRO-LOGIC, 3 STEREO, DSP LOGIC, DSP. | MANUAL |

0: NO DIODE 1: ADD DIODE

# KR-694/V5560/V6060

## CIRCUIT DESCRIPTION

### 3. Function initial setting

① POWER OFF

② AMP system

- AUDIO SELECTOR — TUNER
- IMAGE SELECTOR — VIDEO 1
- SPEAKER A — ON
- SPEAKER B — OFF
- TAPE 2 MONITOR — OFF
- LINE STRAIGHT — OFF
- LOUDNESS — OFF

③ TUNER system

- BAND — FM
- FREQUENCY — Lower limit of FM (87.5 MHz)
- TUNING MODE — AUTO TUNING (AUTO STEREO)
- P. CH DISPLAY — ——ch

④ SURROUND system

- MODE — BYPASS (OFF)
- CENTER LEVEL — 0 dB
- REAR LEVEL — 0 dB
- PROLOGIC MODE — NORMAL
- 3 STEREO MODE — NORMAL
- DSP MODE — ARENA
- PRESENCE LEVEL:
  - DSP — −0 dB
  - DSP LOGIC (KR-V8060 ONLY) — −0 dB
  - THEATER LOGIC — −4 dB
- DELAY TIME:
  - DOLBY PROLOGIC — 20 ms
  - DSP — 30 ms
  - DSP LOGIC (KR-V8060 ONLY) — 40 ms
  - THEATER LOGIC — 30 ms

⑤ TEST PRESET FREQUENCY

| | K1 TYPE | K2 TYPE | E TYPE |
|---|---|---|---|
| 01 ch | FM 98.00 MHz | FM 98.00 MHz | FM 98.00 MHz |
| 02 ch | FM 108.00 MHz | FM 108.00 MHz | FM 108.00 MHz |
| 03 ch | AM 630 kHz | AM 630 kHz | AM 630 kHz |
| 04 ch | AM 990 kHz | AM 990 kHz | AM 990 kHz |
| 05 ch | AM 1440 kHz | AM 1440 kHz | AM 1440 kHz |
| 06 ch | AM 1610 kHz | AM 1610 kHz | AM 1602 kHz |
| 07 ch | AM 1700 kHz | FM 87.50 MHz | FM 87.50 MHz |
| 08 ch | FM 87.50 MHz | FM 87.50 MHz | FM 87.50 MHz |
| 09 ch | FM 87.50 MHz | FM 87.50 MHz | FM 87.50 MHz |
| 10 ch | FM 89.10 MHz | FM 89.10 MHz | FM 89.10 MHz |
| 11 ch | FM 87.50 MHz | FM 87.50 MHz | FM 87.50 MHz |
| 12 ch | FM 90.00 MHz | FM 90.00 MHz | FM 90.00 MHz |
| 13 ch | FM 106.00 MHz | FM 106.00 MHz | FM 106.00 MHz |
| 14 ch | AM 530 kHz | AM 530 kHz | AM 531 kHz |
| 15 ch | FM 87.50 MHz | FM 87.50 MHz | FM 87.50 MHz |
| 16 ch | FM 87.50 MHz | FM 87.50 MHz | FM 87.50 MHz |
| 17 ch | FM 87.50 MHz | FM 87.50 MHz | FM 87.50 MHz |
| 18 ch | FM 87.50 MHz | FM 87.50 MHz | FM 87.50 MHz |
| 19 ch | FM 87.50 MHz | FM 87.50 MHz | FM 87.50 MHz |
| 20 ch | FM 87.50 MHz | FM 87.50 MHz | FM 87.50 MHz |

**The initial setting is performed in a following event:**

1. **When backup memory data is destroyed when reset is applied to the microprocessor.**
2. **When the power cord is plugged in to the AC wall outlet while pressing the POWER key.**

## 4. TEST MODE

### Setting method

Plug the power cord in the AC electrical outlet while depressing the "TUNING DOWN" key.

### Cancellation method

Unplug the power cord from the AC electrical outlet.

### Contents

① Starting the main unit test mode

When plug the power cord in the outlet while depressing the "TUNING DOWN" key, the test mode is entered which uses the main unit keys. At this time the following three actions occur:

- The power comes ON automatically.
- The fluorescent display and all LEDs illuminate.
- All conditions except POWER ON/OFF are initialized.

The all-illuminated state is cleared by pressing any main unit key. Also, any conditions changed during test mode are reinitialized when the test mode is cleared (by turning the AC power supply OFF).

② Automatic motor VR UP/DOWN (AMP)

Operating the "TAPE 2" key actuates the motor VR as follows: 16 seconds UP → 16 seconds DOWN → STOP. Accordingly, "TAPE 2 MONITOR" switching cannot be done during the main unit test mode.

③ Mute signal output (AMP)

No Selector MUTE (MUTE 1) control regulation is done whatsever.

④ 0 ~ 9, +10 testmode (TUNER)

a) When the +10 key is not operated, channels 1 through 9 (1 ~ 9 keys) and channel 10 (0 key) can be called.
b) When the +10 key is operated once, channels 11 through 19 (1 ~ 9 keys) and channel 20 (0 key) can be called.
c) When the +10 key is operated once more, the condition returns to that of a) above: "when the +10 key is not operated."

⑤ Operations that can only be done by remote control

a) AMP system: NONE
b) TUNER system: NONE
c) SURROUND system

"P. CH CALL" key: Same operation as the "CENTER MODE" key.

"DIRECT" key: Same operation as "TEST TONE" key.

- Naturally enugh, "P. CH CALL" "DIRECT" operation cannot be carried out.

⑥ During the test mode, because there is no 4/8 switching input status display, the fluorescent "SPEAKERS" display is substituted instead.

(4/8 = Light on/Light off) As a result, please be careful concerning illumination of "SPEAKERS" during the test mode.

⑦ Cancellating the main unit test mode

When the power cord unplug in the AC outlet during the main unit test mode, the test mode is cancelled and the initial condition restored.

# KR-694/V5560/V6060

## CIRCUIT DESCRIPTION

### 5.Microprocessor : μPD78043GF/μPD78044GF (X14 : IC1)

① **Microprocessor periphery block diagram**

**μPD78043GF [K,P,M,X,Y type ]**
**μPD78044GF [E,T type ]**

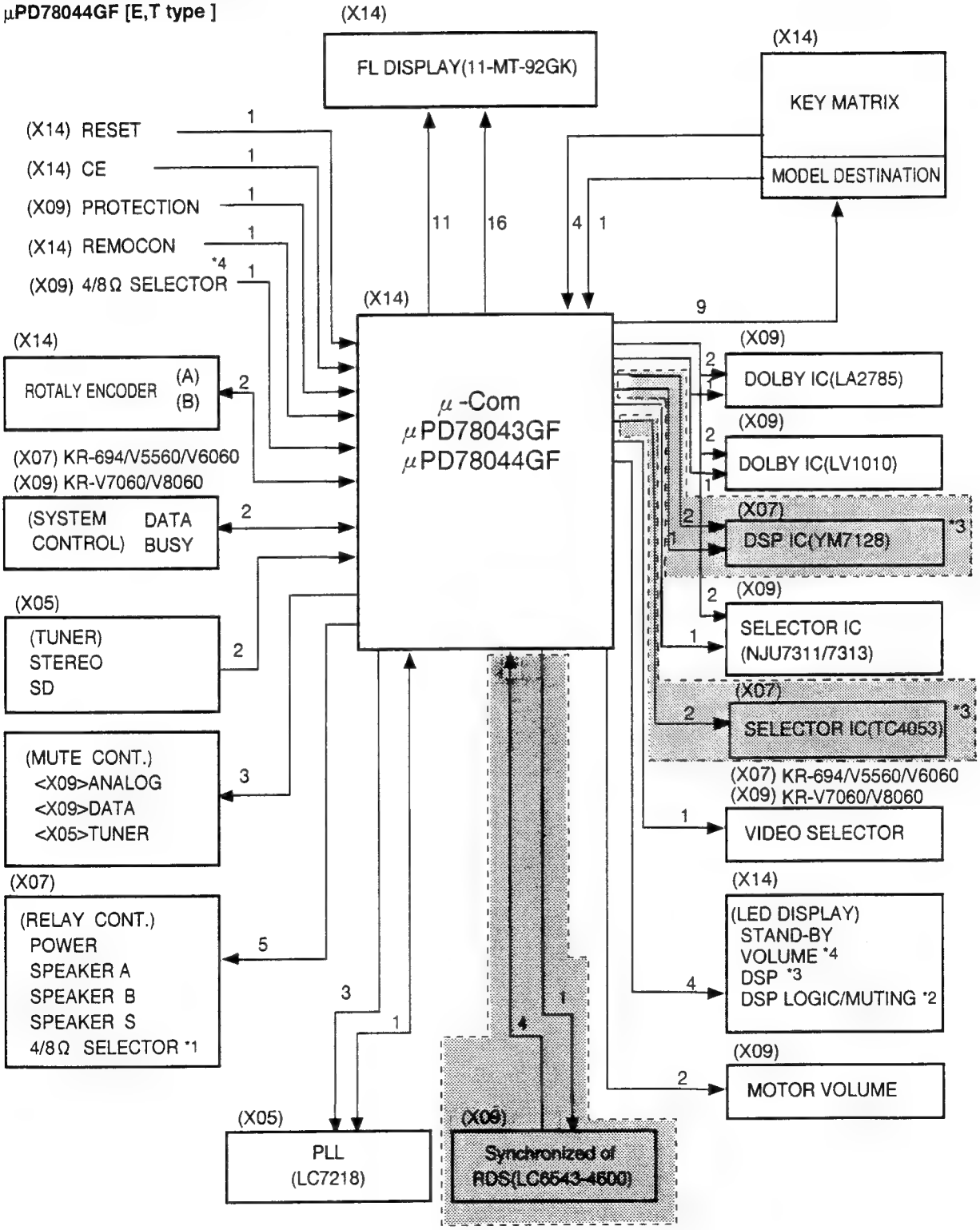


*1 : KR-V6060 only
*2 : Usually, DSP LOGIC(LED) , MUTING(LED) when KR-V5560.
*3 : KR-V8060 only
*4 : Unused for KR-V5560.

: μPD78044GF ONLY

# CIRCUIT DESCRIPTION

② **Port layout**

**μPD78043GF [K,P,M,X,Y type ]**
**μPD78044GF [E,T type ]**

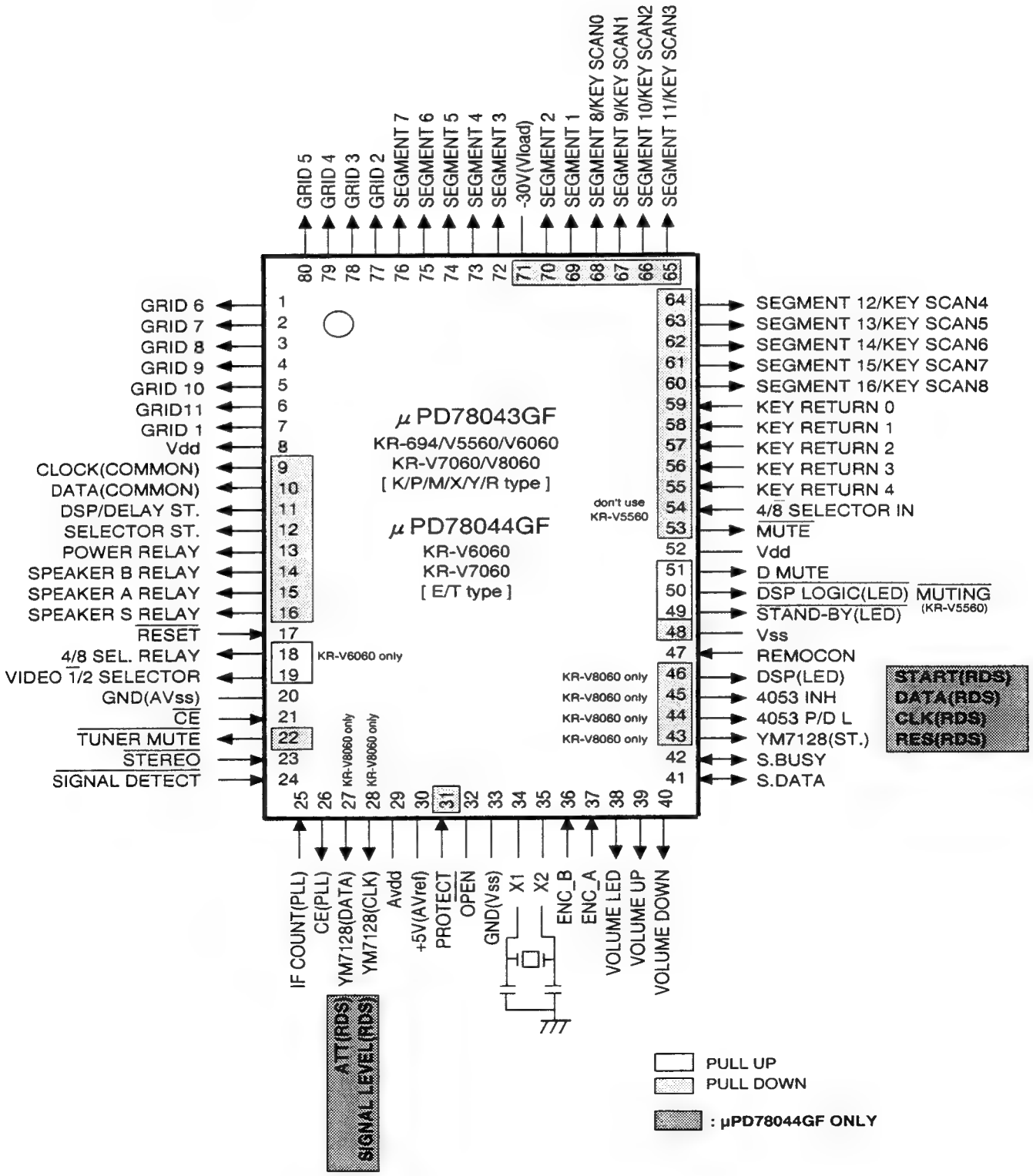

# KR-694/V5560/V6060

## CIRCUIT DESCRIPTION

### ③ Pin description

**For pin numbers marked by an asterisk(*) the upper row is μPD78043GF and the lower ( ) row is μPD78044GF.**

| Pin No. | μ-Com No. | Port I/O | Name | Description | | |
|---|---|---|---|---|---|---|
| 1 | | OUT | GRID 6 | FL Grid 6 | | |
| 2 | | OUT | GRID 7 | FL Grid 7 | | |
| 3 | | OUT | GRID 8 | FL Grid 8 | | |
| 4 | | OUT | GRID 9 | FL Grid 9 | | |
| 5 | | OUT | GRID 10 | FL Grid 10 | | |
| 6 | | OUT | GRID 11 | FL Grid 11 | | |
| 7 | | OUT | GRID 1 | FL Grid 1 | | |
| 8 | | - | Vdd | Microprocessor power supply | | |
| 9 | | OUT | CLOCK (COMMON) | Clock for control IC (ANALOG SW/PLL IC/DSP) | | |
| 10 | | OUT | DATA (COMMON) | Data for control IC (ANALOG SW/PLL IC/DSP) | | |
| 11 | | OUT | DSP/DELAY ST. | DSP IC Strobe for control (LA2785/LV1010) | | |
| 12 | | OUT | SELECTOR ST. | Strobe for control selector IC | | |
| 13 | | OUT | POWER RELAY | Power relay control | H: POWER ON | L: POWER OFF |
| 14 | | OUT | SPEAKER B RELAY | Speaker B relay control | H: SP B ON | L: SP B OFF |
| 15 | | OUT | SPEAKER A RELAY | Speaker A relay control | H: SP A ON | L: SP A OFF |
| 16 | | OUT | SPEAKER S RELAY | Surround speaker relay control | H: SP S ON | L: SP S OFF |
| 17 | | IN | $\overline{\text{RESET}}$ | Microprocessor reset | | |
| 18 | | OUT | $\overline{\text{4/8}}$ CHANGEOVER RELAY | TAP control (KR-V6060 only) | H: HIGF TAP | L: LOW TAP |
| 19 | | OUT | VIDEO $\overline{\text{1/2}}$ SELECTOR | VIDEO Selector | H: VIDEO 2 | L: VIDEO 1 |
| 20 | | - | AVss | A/D power supply(GND) | | |
| 21 | | IN | CE | Microprocessor CE | | |
| 22 | | OUT | $\overline{\text{TUNER MUTE}}$ | TUNER MUTE control | H: MUTE OFF | L: MUTE ON |
| 23 | | IN | $\overline{\text{STEREO}}$ | Stereo signal detection | H: MONORAL | L: STEREO |
| 24 | | IN | $\overline{\text{SIGNAL DETECT}}$ | Synchronized signal detection | H: NO TUNED | L: TUNED |
| 25 | | IN | IF COUNT(PLL) | IF COUNT Data (PLL DO) | | |
| 26 | | OUT | CE(PLL) | PLL CE | | |
| *27 | μPD78043GF | OUT | YM7128(DATA) | DSP IC Data for control | | |
| *27 | μPD78044GF | OUT | ATT(RDS) | Atineter control | | |
| *28 | μPD78043GF | OUT | YM7128(CLK) | DSP IC Clock for control | | |
| *28 | μPD78044GF | OUT | SIGNAL LEVEL(RDS) | SIGNAL LEVEL (A/D) | | |
| 29 | | - | AVdd | A/D Power supply | | |
| 30 | | - | AVref | A/D Reference voltage (+5V) | | |
| 31 | | IN | PROTECT | Protection detection | H: PROTECTION | L: NORMAL |
| 32 | | - | OPEN | | | |
| 33 | | - | Vss | Microprocessor power supply(GND) | | |
| 34 | | IN | X1 | 4.19 MHz Oscillator | | |
| 35 | | OUT | X2 | 4.19 MHz Oscillator | | |
| 36 | | IN | ENC_B | Encoder input B | | |
| 37 | | IN | ENC_A | Encoder input A | | |
| 38 | | OUT | VOLUME LED | VOLUME LED control | H: LED OFF | L: LED ON |
| 39 | | OUT | VOLUME UP | MOTOR VOLUME control (UP) | | |
| 40 | | OUT | VOLUME DOWN | MOTOR VOLUME control (DOWN) | | |
| 41 | | I/O | S.DATA | 8 bit system DATA | | |

# CIRCUIT DESCRIPTION

**For pin numbers marked by an asterisk(*) the upper row is μPD78043GF and the lower ( ) row is μPD78044GF.**

| Pin No. | μ-Com No. | Port I/O | Name | Description | | |
|---|---|---|---|---|---|---|
| 42 | | I/O | S.BUSY | 8 bit system BUSY | | |
| *43 | μPD78043GF | OUT | YM7128(ST.) | DSP IC Strobe for control | | |
| *43 | μPD78044GF | OUT | RES(RDS) | RDS Reset | | |
| *44 | μPD78043GF | OUT | 4053 P/D L | TC4053 Control pin | | |
| *44 | μPD78044GF | OUT | CLK(RDS) | RDS Clock | | |
| *45 | μPD78043GF | OUT | 4053 INH | TC4053 Control pin | | |
| *45 | μPD78044GF | OUT | DATA(RDS) | RDS Data | | |
| *46 | μPD78043GF | OUT | DSP(LED) | DSP LED Control | H: LED ON | L: LED OFF |
| *46 | μPD78044GF | OUT | START(RDS) | RDS Start | | |
| 47 | | IN | REMOCON | Remote control input | | |
| 48 | | - | GND | | | |
| 49 | | OUT | STAND-BY(LED) | STAND-BY LED Control | H: LED OFF | L:LED ON |
| 50 | | OUT | DSP LOGIC(LED) | DSP LOGIC LED Control | H: LED OFF | L: LED ON |
| 51 | | OUT | D MUTE | DATA MUTE | | |
| 52 | | - | Vdd | Microprocessor power supply | | |
| 53 | | OUT | $\overline{\text{MUTE}}$ | Selector MUTE control | H: MUTE OFF | L: MUTE ON |
| 54 | | IN | 4/$\overline{8}$ SELECTOR IN | Speaker inpedance changeover | H: 4Ω | L: 8Ω |
| 55 | | IN | KEY RETURN 4 | Key return 4 | | |
| 56 | | IN | KEY RETURN 3 | Key return 3 | | |
| 57 | | IN | KEY RETURN 2 | Key return 2 | | |
| 58 | | IN | KEY RETURN 1 | key return 1 | | |
| 59 | | IN | KEY RETURN 0 | Key return 0 | | |
| 60 | | OUT | SEGMENT 16 | FL Segment 16/key scan 8 | | |
| 61 | | OUT | SEGMENT 15 | FL Segment 15/key scan 7 | | |
| 62 | | OUT | SEGMENT 14 | FL Segment 14/key scan 6 | | |
| 63 | | OUT | SEGMENT 13 | FL Segment 13/key scan 5 | | |
| 64 | | OUT | SEGMENT 12 | FL Segment 12/key scan 4 | | |
| 65 | | OUT | SEGMENT 11 | FL Segment 11/key scan 3 | | |
| 66 | | OUT | SEGMENT 10 | FL Segment 10/key scan 2 | | |
| 67 | | OUT | SEGMENT 9 | FL Segment 9/key scan 1 | | |
| 68 | | OUT | SEGMENT 8 | FL Segment 8/key scan 0 | | |
| 69 | | OUT | SEGMENT 1 | FL Segment 1 | | |
| 70 | | OUT | SEGMENT 2 | FL Segment 2 | | |
| 71 | | - | Vload | FL Driver power supply( - 30V) | | |
| 72 | | OUT | SEGMENT 3 | FL Segment 3 | | |
| 73 | | OUT | SEGMENT 4 | FL Segment 4 | | |
| 74 | | OUT | SEGMENT 5 | FL Segment 5 | | |
| 75 | | OUT | SEGMENT 6 | FL Segment 6 | | |
| 76 | | OUT | SEGMENT 7 | FL Segment 7 | | |
| 77 | | OUT | GRID 2 | FL Grid 2 | | |
| 78 | | OUT | GRID 3 | FL Grid 3 | | |
| 79 | | OUT | GRID 4 | FL Grid 4 | | |
| 80 | | OUT | GRID 5 | FL Grid 5 | | |

# KR-694/V5560/V6060

## ADJUSTMENT

### [FM,AM SECTION : E,T Type ONLY]

| No. | ITEM | INPUT SETTINGS | OUTPUT SETTINGS | TUNER SETTINGS | ALIGNMENT POINT | ALIGN FOR | FIG. |
|---|---|---|---|---|---|---|---|
| FM SECTION | | SELECTOR : FM | | | | | |
| 1 | DISCRIMINATOR | (A)<br>98.0MHz<br>1kHz,±75kHz dev<br>60dBμ(ANT input) | Connect a DC voltmeter between TP3 and TP4. | AUTO or MONO<br>98.0MHz | L3<br>(X05-) | 0V | (a) |
| | | | | | L4<br>(X05-) | Minimum distortion | |
| 2 | DISTORTION (STEREO) | (C)<br>98.0MHz<br>1kHz,±68.25kHz dev<br>Selector: L or R<br>Pilot : ±6.75kHz dev<br>60dBμ(ANT input) | (B) | 98.0MHz | IFT<br>(W02-) | Mimum distortion.<br>(L or R) | |
| 3 | SEPARATION | (C)<br>98.0MHz<br>Stereo signal<br>60dBμ(ANT input) | (B) | AUTO<br>98.0MHz | VR3<br>(X05-) | Minimum crosstalk | |
| 4 | TUNING LEVEL | (A)<br>98.0MHz<br>0dev<br>14dBμ(ANT input)75Ω<br>18dBμ(ANT input)30Ω | (B) | AUTO<br>or MONO<br>98.0MHz | VR1<br>(X05-) | Adjust VR1 and stop at the point where ED1(TUNED) goes on. | |
| AM SECTION | | SELECTOR : AM | | | | | |
| (1) | TUNING LEVEL | (D)<br>1008kHz<br>20dBμ(ANT input) | (B) | 1008kHz | VR2<br>(X05-) | Adjust VR2 and stop at the point where ED1(TUNED) goes on. | |

### [COMMON]

| No. | ITEM | INPUT SETTINGS | OUTPUT SETTINGS | AMPLIFIER SETTINGS | ALIGNMENT POINT | ALIGN FOR | FIG. |
|---|---|---|---|---|---|---|---|
| AUDIO SECTION | | | | | | | |
| < 1 > | IDLE CURRENT | - | (E)<br>Connect a DC voltmeter across<br>CP1(L)<br>CP2(R)<br>CP3(CENTER)<br>CP4(REAR) | Volume:0 | VR1(L)<br>VR2(R)<br>VR3(CENTER)<br>VR4(REAR)<br><br>(X07-) | 22mV | (b) |
| POWER : ON | | SELECTOR : CD(NO SIGNAL) | | SURROUND : PRO LOGIC | | | |
| < 2 > | PRO LOGIC S-OUT NOISE LEVEL | Short between TP6 and TP7 (B/5), between TP10 and TP11 (E/5).<br>(X09-) | Connect a oscilloscope at Rear sp L or R. (Connect load with Rear sp L or R.) | Volume:MAX<br><br>REAR LEVEL:MAX | VR3<br><br>(X09-)(E/5) | Minimum noise level (fig. Ⓒ point of (c). | (c) |

# ADJUSTMENT

(a)

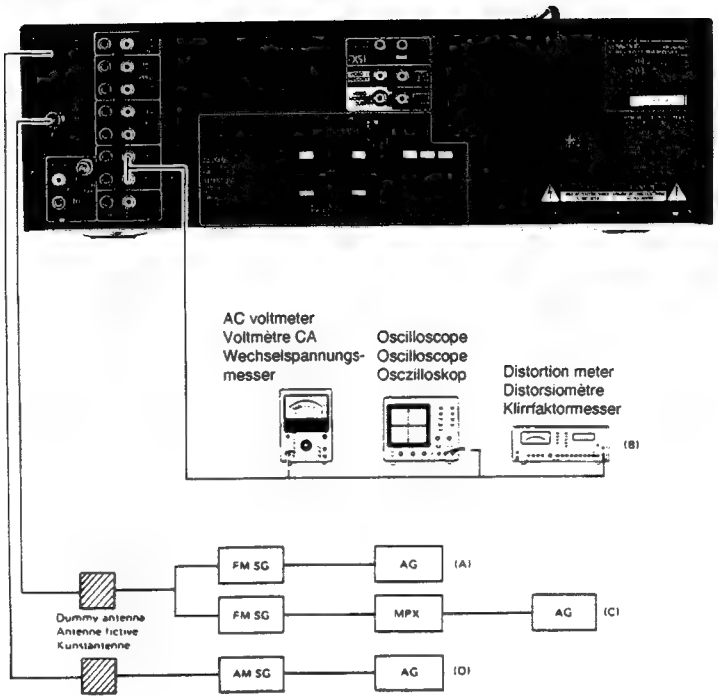


(b) System connections/Reccordements du système/System-Anschlusse

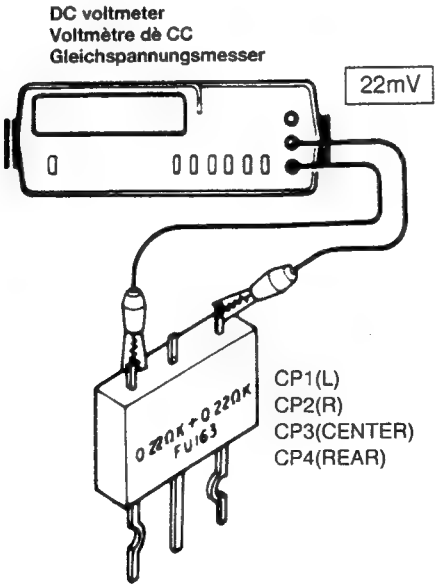


(E)

# ADJUSTMENT

(c)

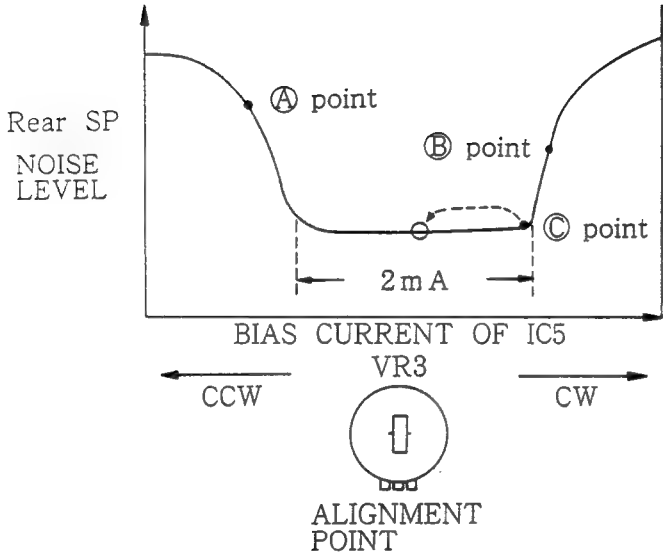


[Procedure]

1) Ⓐ point

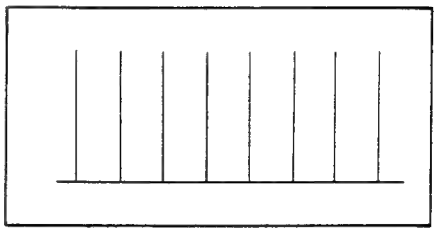

2) Ⓑ point

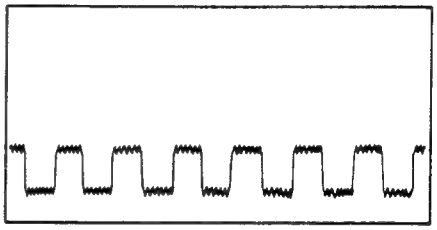

3) Ⓒ point (Minimum noise level)

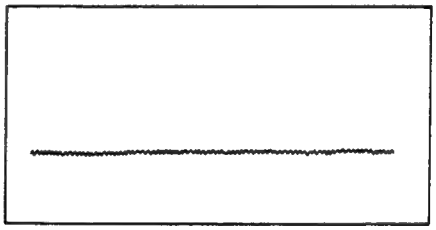

# KR-694/V5560/V6060 KR-694/V5560/V6060

## WIRING DIAGRAM

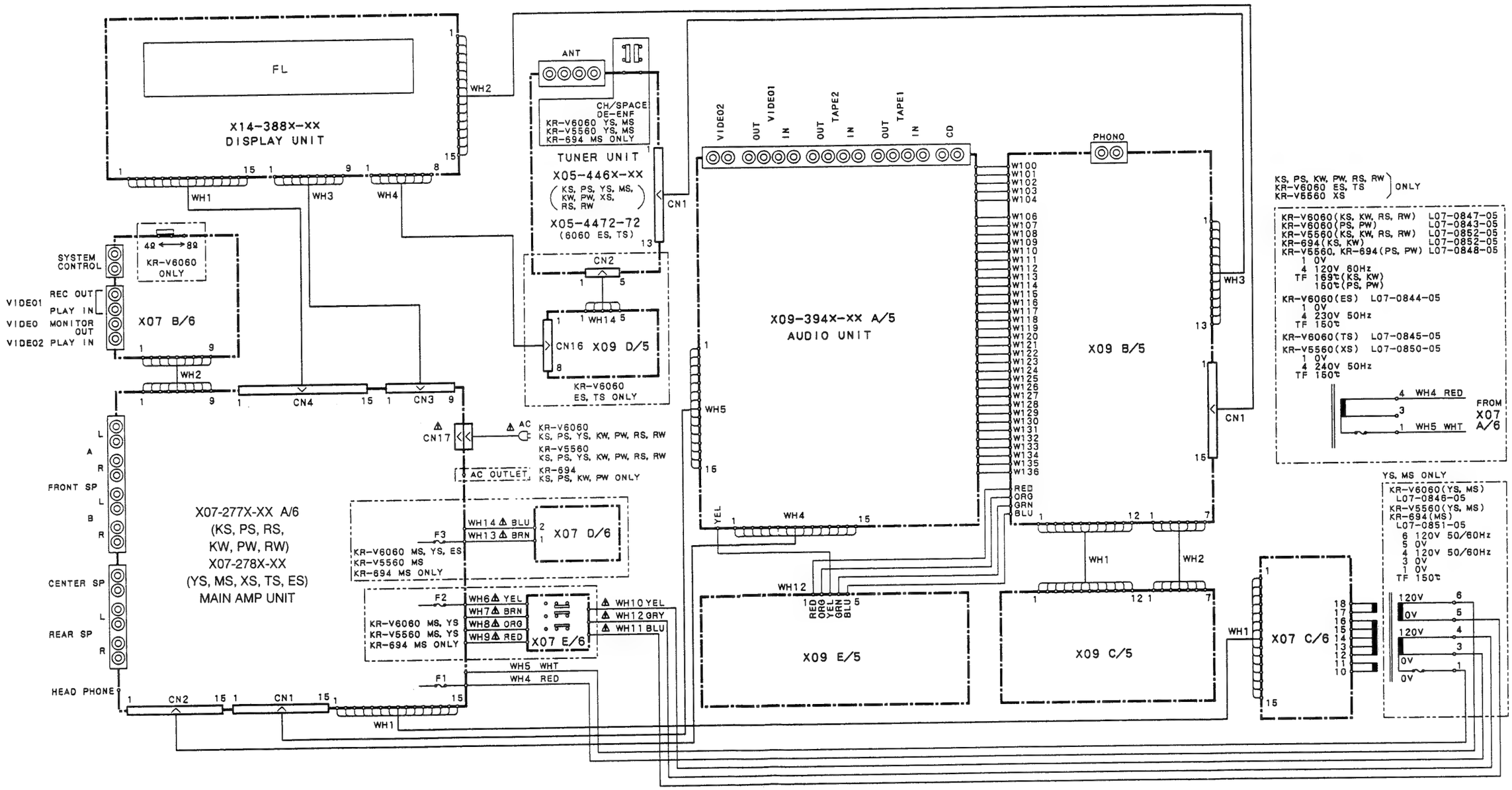

# PC BOARD (Component side view)

**TUNER UNIT(X05-446X-XX) : Except E,T**

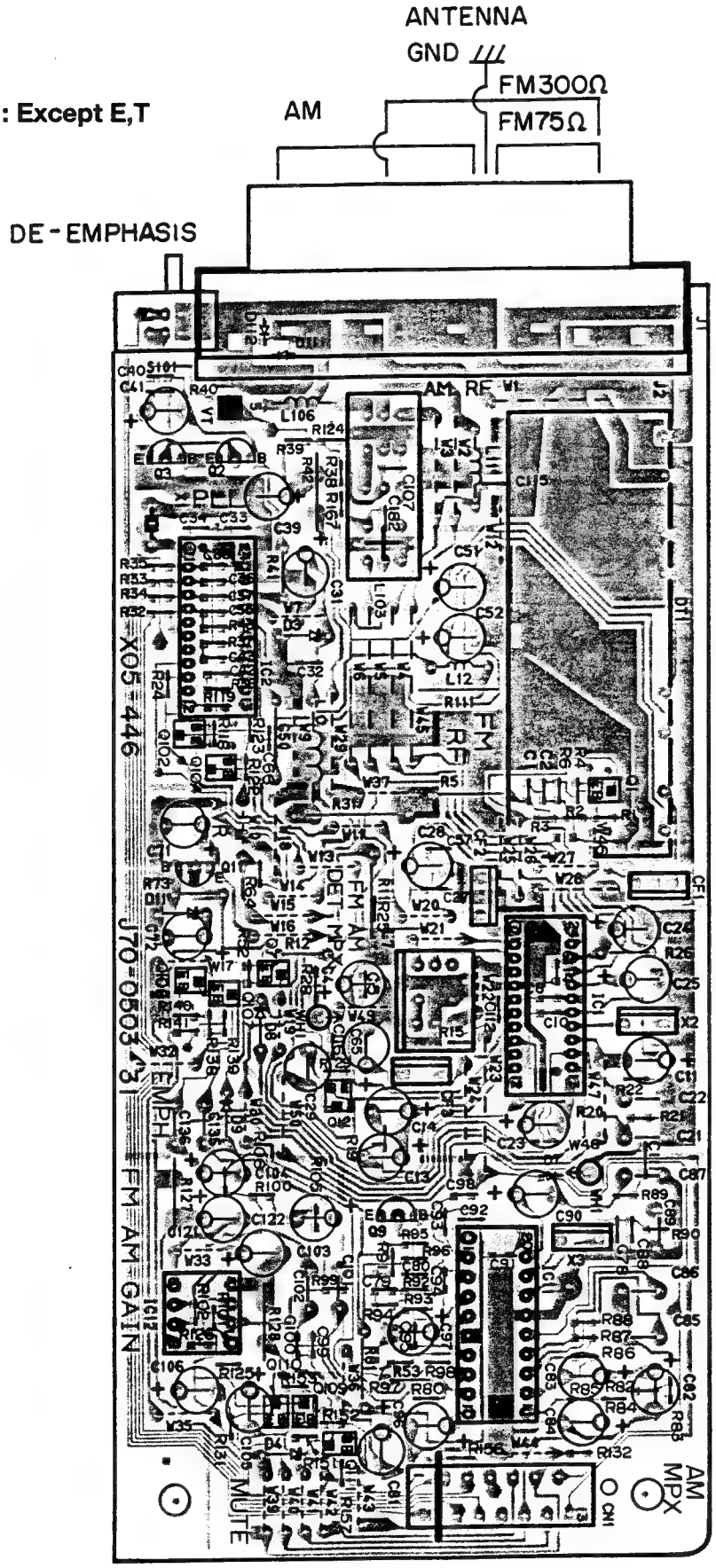

**TUNER UNIT(X05-4472-72) : E,T**
**(KR-V6060 only)**

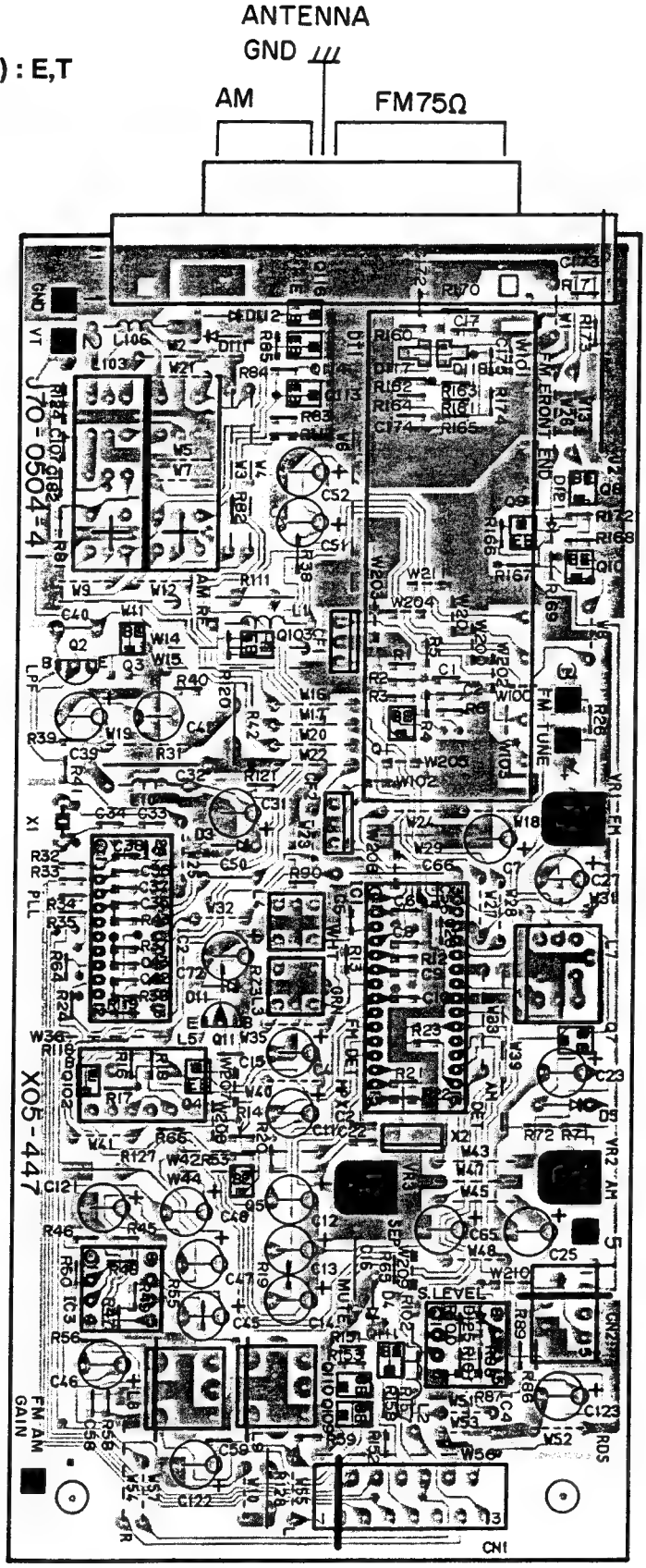

# PC BOARD (Component side view)

**MAIN AMP UNIT(X07-277X-XX) : K,P,R**
**(X07-278X-XX) : Y,M,X,T,E**

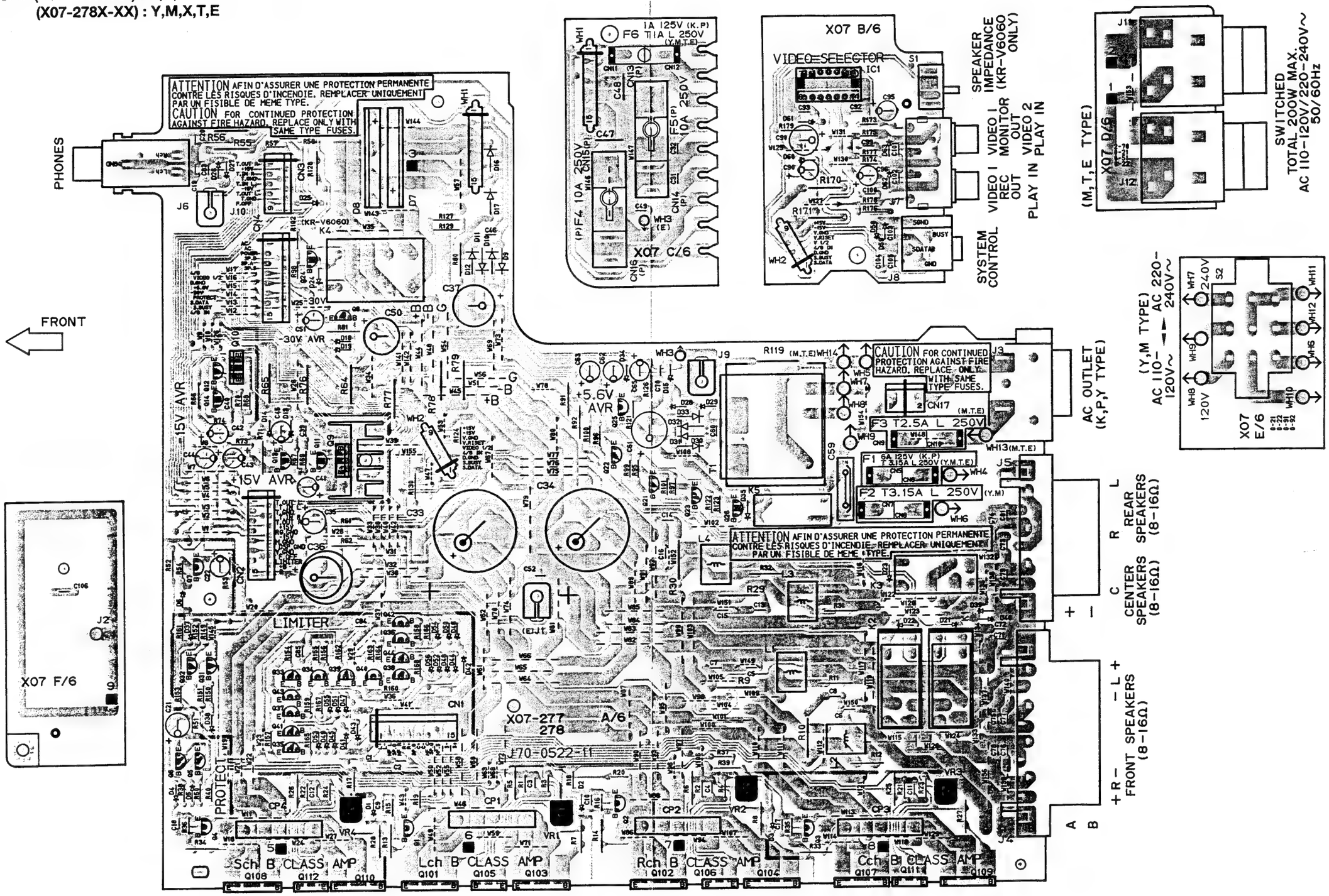


Refer to the schematic diagram for the values of resistors and capacitors.

# PC BOARD (Component side view) AUDIO UNIT(X09-394X-XX)

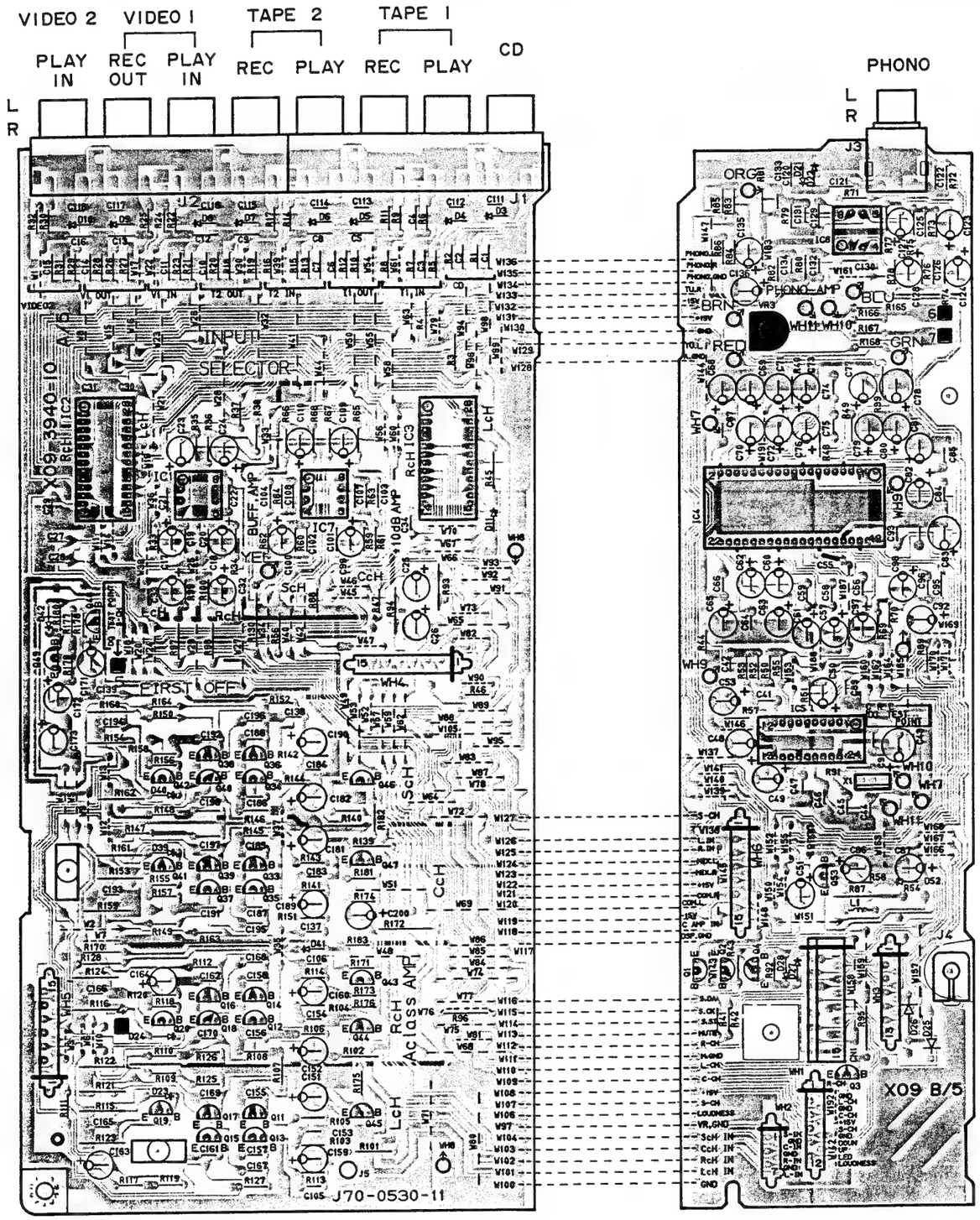


RDS UNIT
KR-V 6060 E,T TYPE ONLY

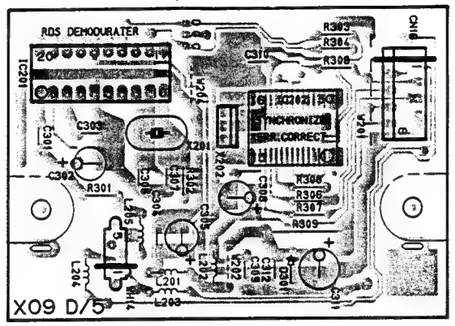


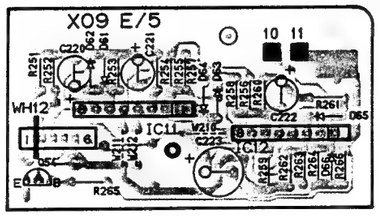


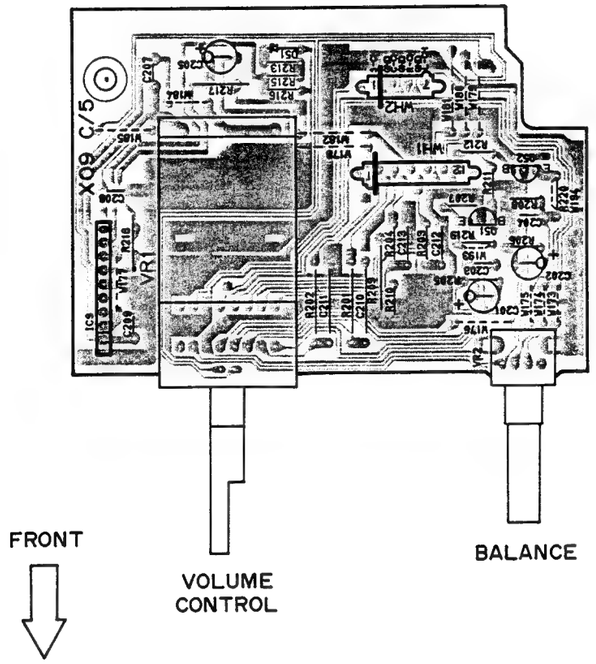


Refer to the schematic diagram for the values of resistors and capacitors.

# PC BOARD (Component side view)

**DISPLAY UNIT(X14-388X-XX)**

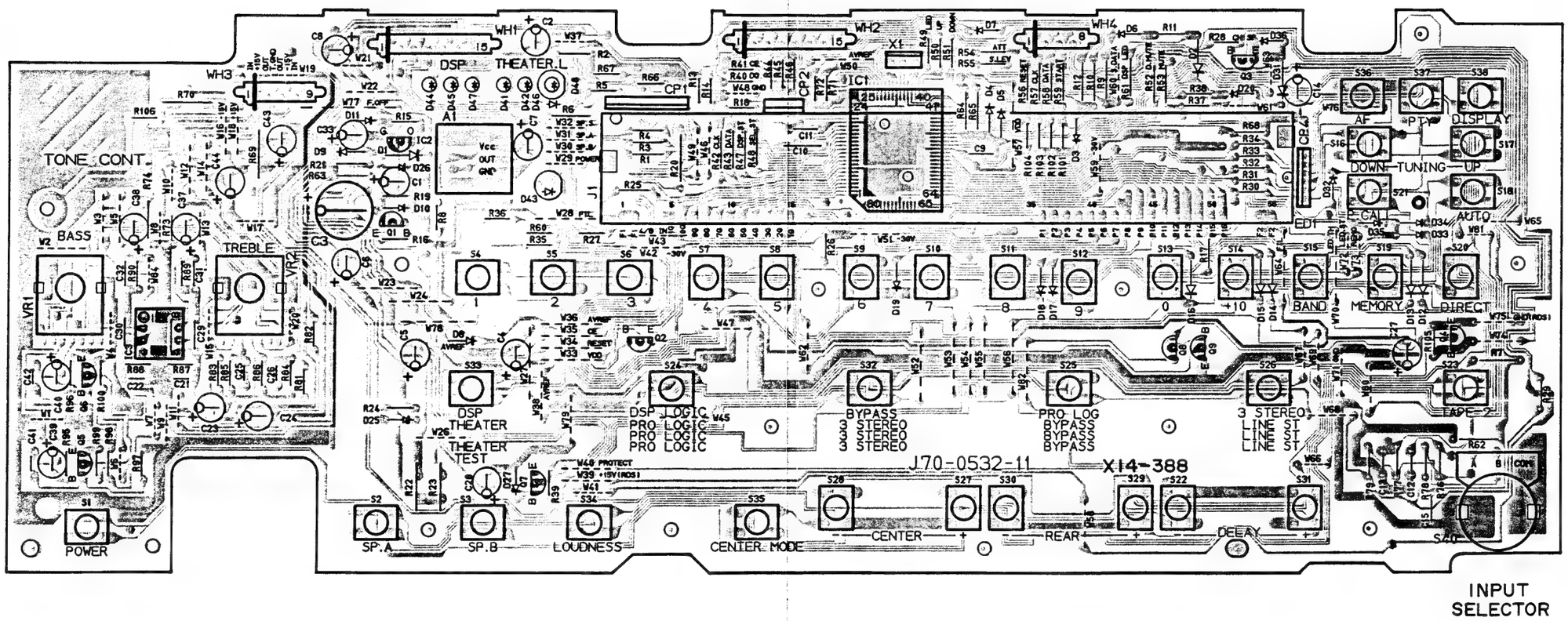


FRONT





Refer to the schematic diagram for the values of resistors and capacitors.

X05-4460-11(K, R, P) X05-4460-71(X) X05-4460-21(M, Y)

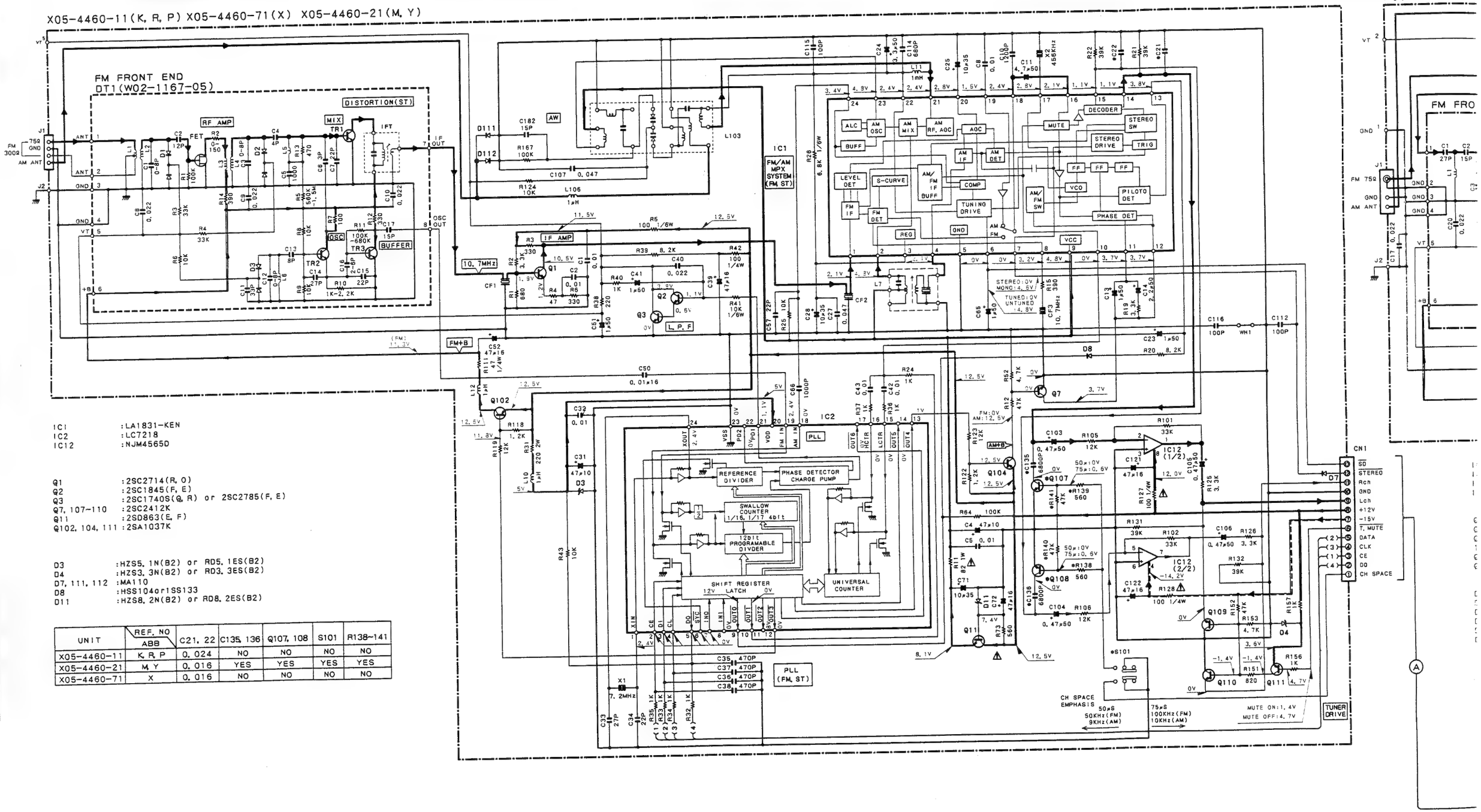


IC1 :LA1831-KEN
IC2 :LC7218
IC12 :NJM4565D

Q1 :2SC2714(R, O)
Q2 :2SC1845(F, E)
Q3 :2SC1740S(Q, R) or 2SC2785(F, E)
Q7, 107~110 :2SC2412K
Q11 :2SD863(E, F)
Q102, 104, 111 :2SA1037K

D3 :HZS5. 1N(B2) or RD5. 1ES(B2)
D4 :HZS3. 3N(B2) or RD3. 3ES(B2)
D7, 111, 112 :MA110
D8 :HSS104or1SS133
D11 :HZS8. 2N(B2) or RD8. 2ES(B2)

| UNIT | REF. NO / ABB | C21, 22 | C135, 136 | Q107, 108 | S101 | R138~141 |
|---|---|---|---|---|---|---|
| X05-4460-11 | K, R, P | 0. 024 | NO | NO | NO | NO |
| X05-4460-21 | M, Y | 0. 016 | YES | YES | YES | YES |
| X05-4460-71 | X | 0. 016 | NO | NO | NO | NO |

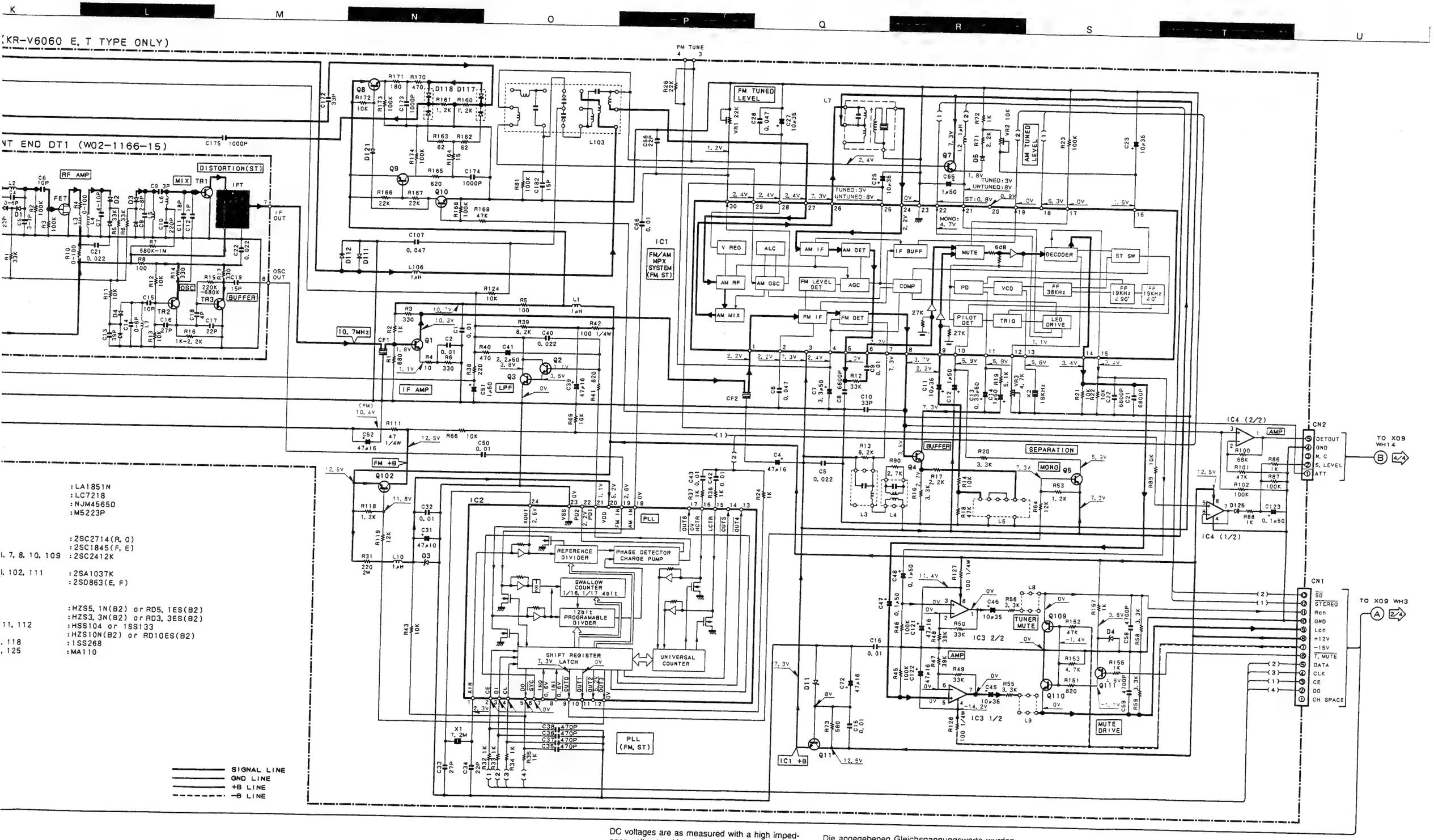


DC voltages are as measured with a high impedance voltmeter. Values may vary slightly due to variations between individual instruments or/and units.

Les tensions c.c. doivent être mesurées avec un voltmètre à haute impédance. Les valeurs peuvent différer légèrement du fait des variations inhérentes aux appareils et aux instruments de mesure individuels.

Die angegebenen Gleichspannungswerte wurden mit einem hochohmigen Spannungsmesser gemessen. Dabei schwanken die Meßwerte aufgrund von Unterschieden zwischen einzelnen Instrumenten oder Geräten u. U.geringfügig.

CAUTION : For continued safety, replace safety critical components only with manufacturer's recommended parts (refer to parts list) ⚠ Indicates safety critical components. To reduce the risk of electric shock, leakage-current or resistance measurements shall be carried out (exposed parts are acceptably insulated from the supply circuit) before the appliance is returned to the customer.



# KR-694/V5560/V6060

Y05-2840-10

KENWOOD

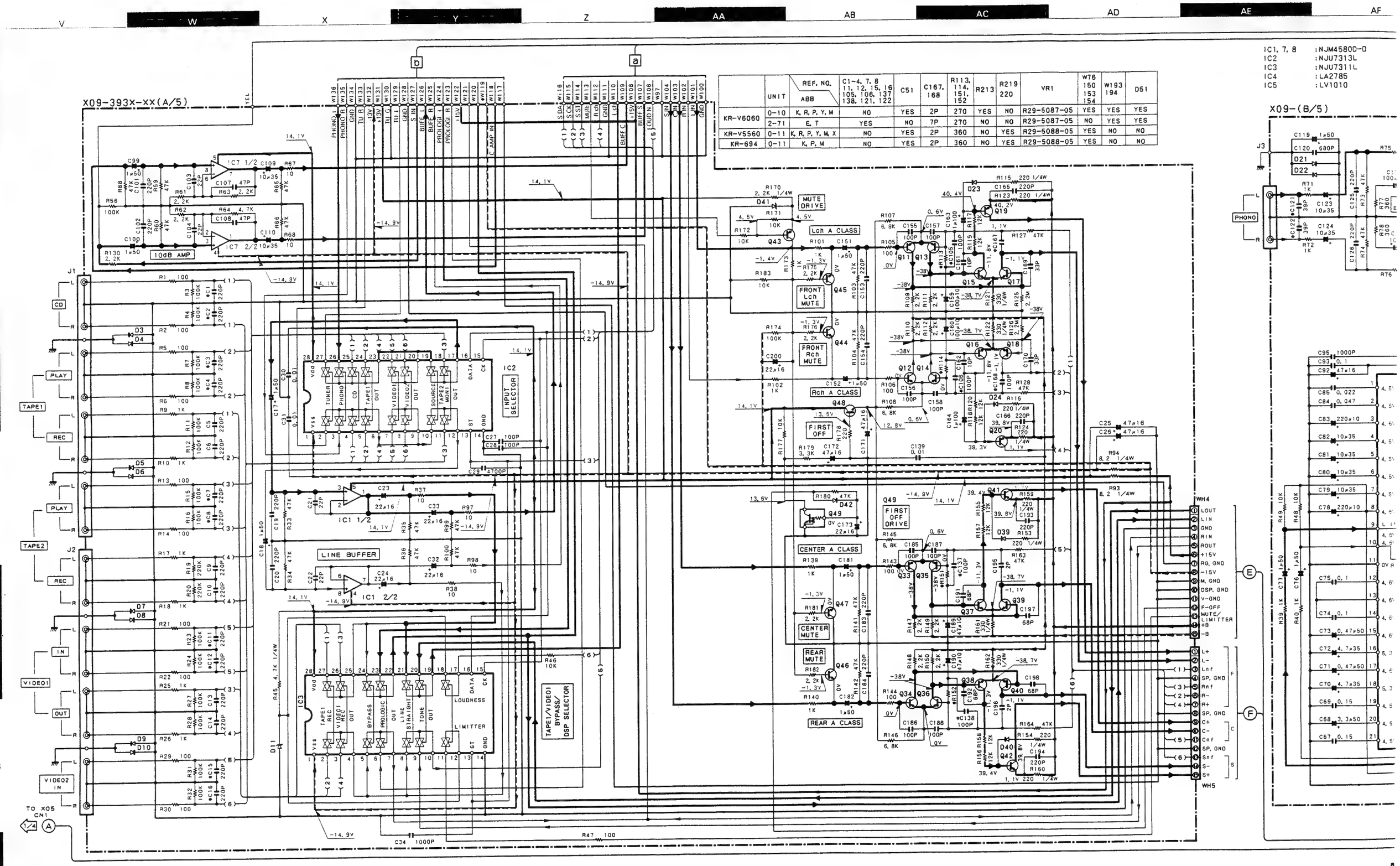


| | UNIT | REF. NO. / ABB | C1-4, 7, 8 11, 12, 15, 16 105, 106, 137 138, 121, 122 | C51 | C167, 168 | R113, 114, 151, 152 | R213 | R219 220 | VR1 | W76 150 153 154 | W193 194 | D51 |
|---|---|---|---|---|---|---|---|---|---|---|---|---|
| KR-V6060 | 0-10 | K, R, P, Y, M | NO | YES | 2P | 270 | YES | NO | R29-5087-05 | YES | YES | YES |
| | 2-71 | E, T | YES | NO | 7P | 270 | NO | NO | R29-5087-05 | NO | YES | YES |
| KR-V5560 | 0-11 | K, R, P, Y, M, X | NO | YES | 2P | 360 | NO | YES | R29-5088-05 | YES | NO | NO |
| KR-694 | 0-11 | K, P, M | NO | YES | 2P | 360 | NO | YES | R29-5088-05 | YES | NO | NO |

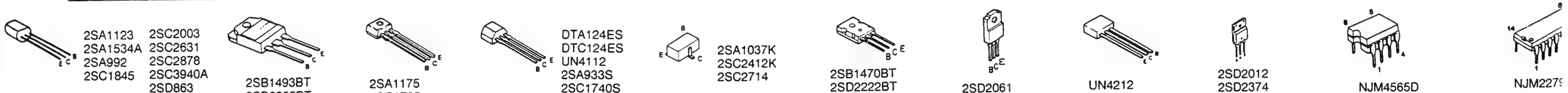

| | C1-4, 7, 8 11, 12, 15, 16 105, 106, 137 138, 121, 122 | C51 | C167, 168 | R113, 114, 151, 152 | R213 | R219 220 | VR1 | W76 150 153 154 | W193 194 | D51 |
|---|---|---|---|---|---|---|---|---|---|---|
| .M | NO | YES | 2P | 270 | YES | NO | R29-5087-05 | YES | YES | YES |
| | YES | NO | 7P | 270 | NO | NO | R29-5087-05 | NO | YES | YES |
| M, X | NO | YES | 2P | 360 | NO | YES | R29-5088-05 | YES | NO | NO |
| | NO | YES | 2P | 360 | NO | YES | R29-5088-05 | YES | NO | NO |

IC1, 7, 8 :NJM4580D-D
IC2 :NJU7313L
IC3 :NJU7311L
IC4 :LA2785
IC5 :LV1010

Q1, 2, 4, 49 :UN4212or DTC124ES
Q11-14, 33-36 :2SA992(F, E)
Q15-18, 37-40 :2SC2631(R, S)
Q19, 20, 41, 42 :2SA1123(R, S)
Q43 :2SA933S(Q, R)

Q44-47 :2SC2878(B)
Q48 :2SC1740S(Q, R)or 2SC2785(F, E)
Q53 :2SC3940A(R, S)

D3-10, 21, 22, 27, 28, :HSS104or1SS133
D11 :RD5, 1ES(B2)or HZS5, 1N(B2)
D23, 24, 39, 40, 42 :HSS104Aor 1SS131
D25, 26 :S5688Bor 1SR139-100
D41 :RD4, 7ES(B2)or HZS4, 7N(B2)
D52 :RD10ES(B2)or HZS10N(B2)

X09-(C/5)
IC9 :TA8409S
Q51, 52 :2SC1740S(Q, R)or 2SC2785(F, E)
D51 :RD5, 1ES(B2)or HZS5, 1N(B2)

X09-(J/5)
IC11, 12 :NJM4565L
Q54 :2SC2878(B)
D61-66 :HSS104or 1SS133

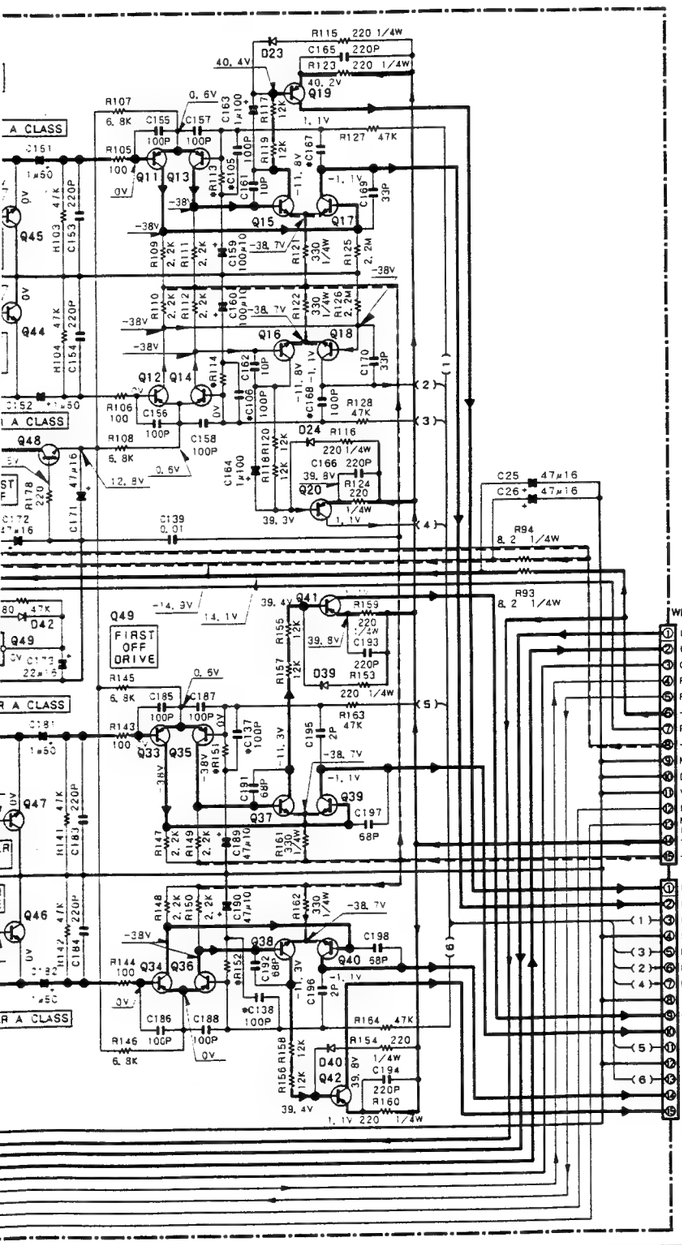


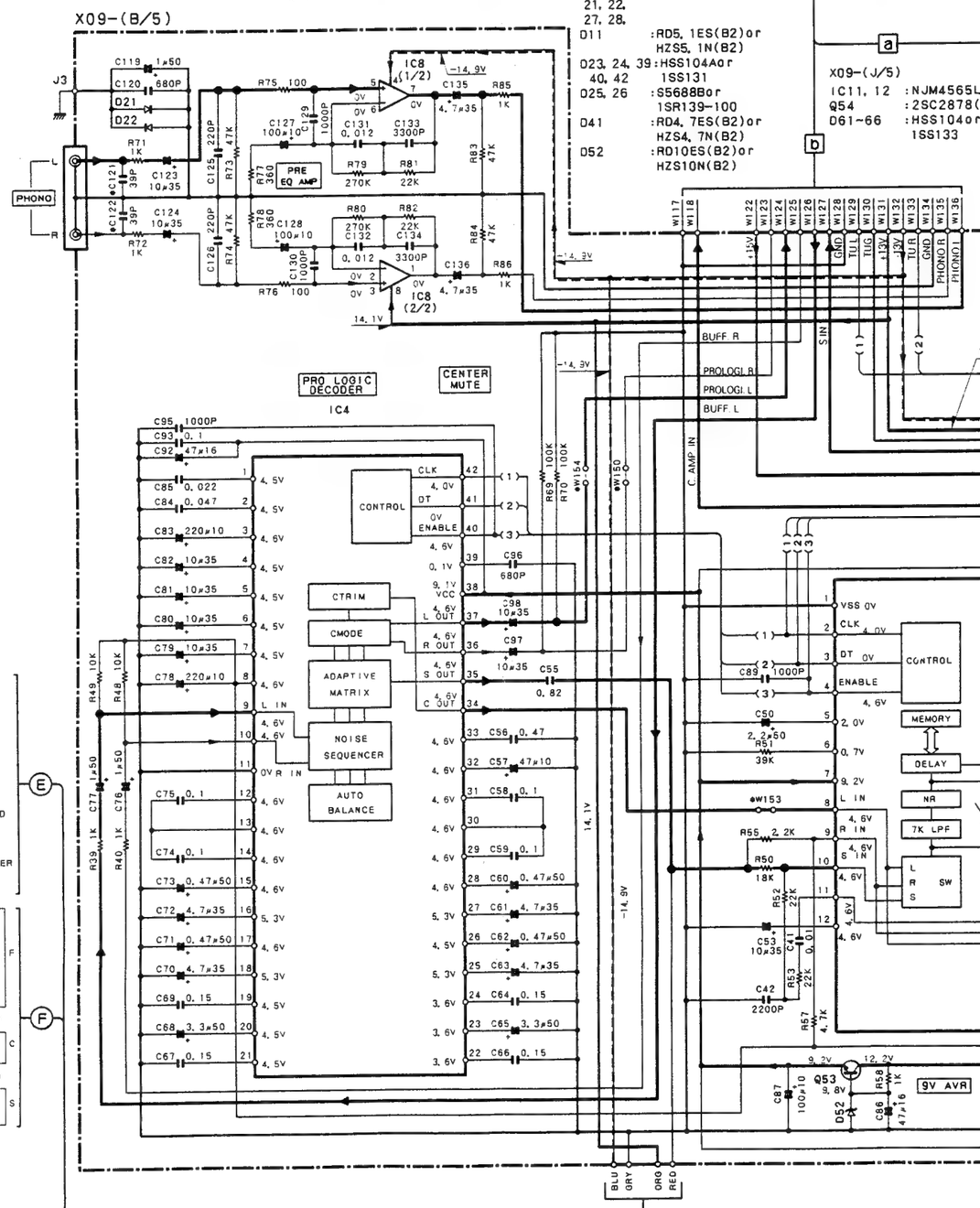


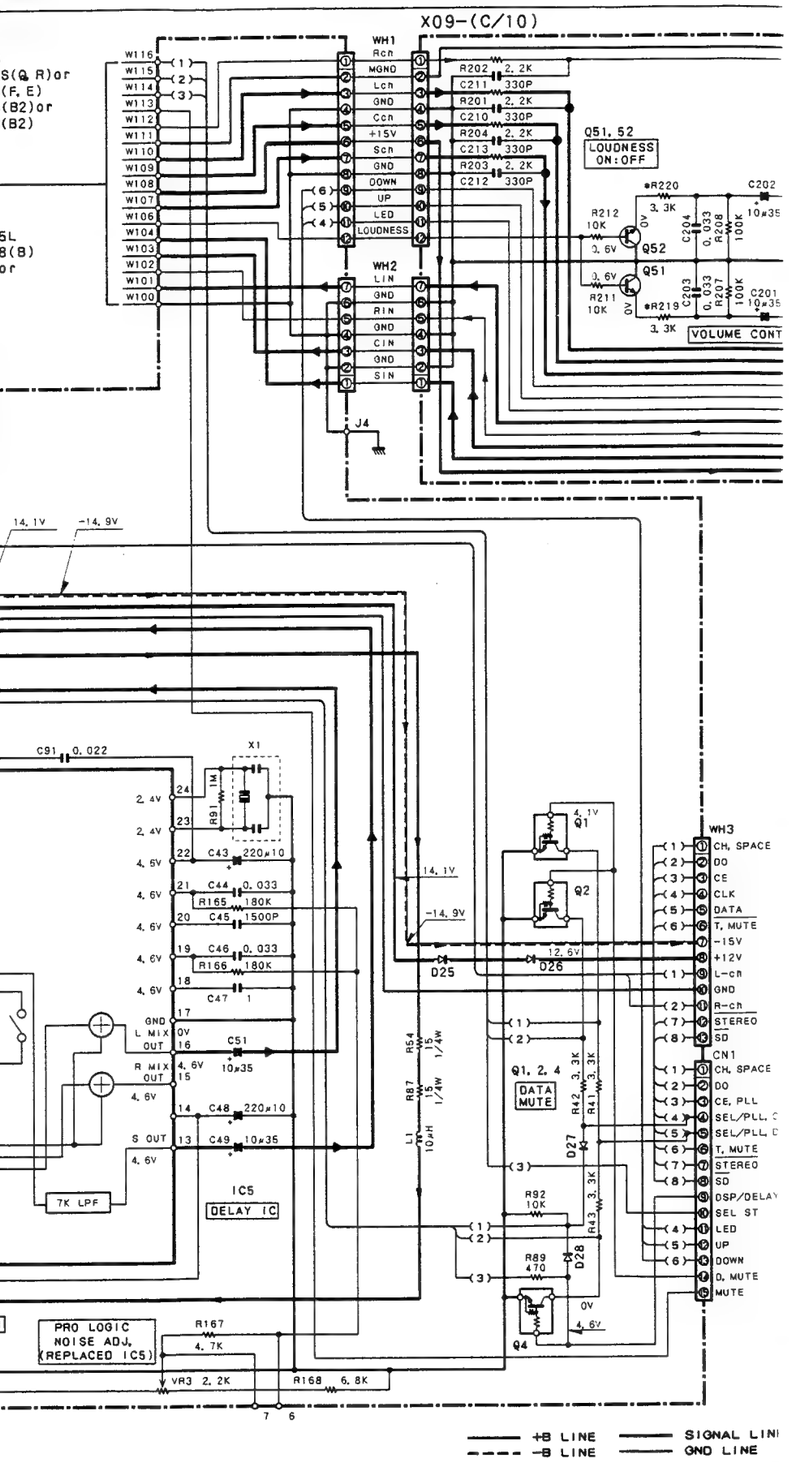


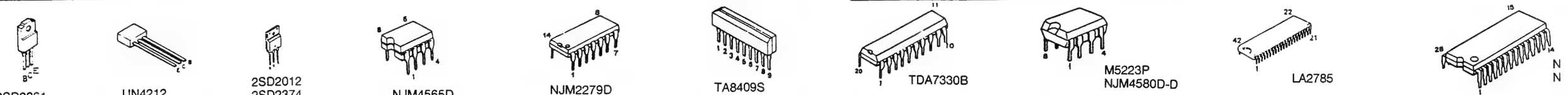

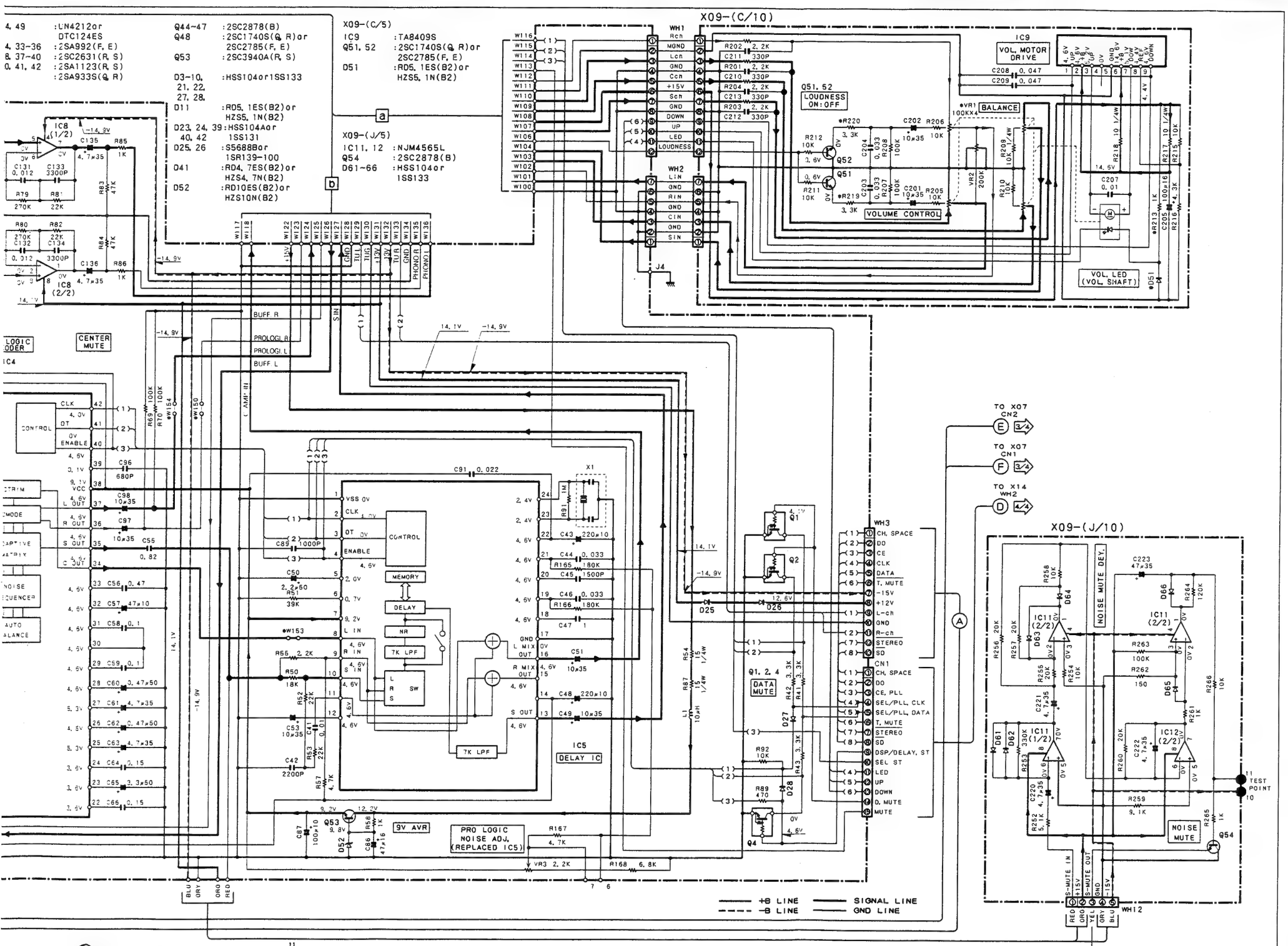


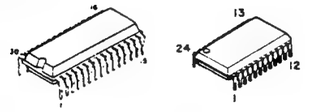
LA1851N


LA1831-KEN

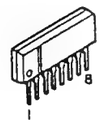
NJM4565L

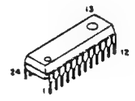
LC7218
LV1010

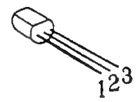
S-80740AL

DC voltages are as measured with a high impedance voltmeter. Values may vary slightly due to variations between individual instruments or/and units.

Les tensions c.c. doivent être mesurées avec un voltmètre à haute impédance. Les valeurs peuvent différer légèrement du fait des variations inhérentes aux appareils et aux instruments de mesure individuels.

Die angegebenen Gleichspannungswerte wurden mit einem hochohmigen Spannungsmesser gemessen. Dabei schwanken die Meßwerte aufgrund von Unterschieden zwischen einzelnen Instrumenten oder Geräten u. U.geringfügig.

CAUTION : For continued safety, replace safety critical components only with manufacturer's recommended parts (refer to parts list) ⚠ Indicates safety critical components. To reduce the risk of electric shock, leakage-current or resistance measurements shall be carried out (exposed parts are acceptably insulated from the supply circuit) before the appliance is returned to the customer.

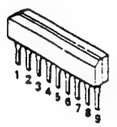
TA8409S

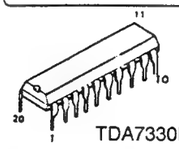
TDA7330B

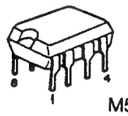
M5223P
NJM4580D-D

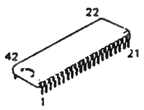
LA2785

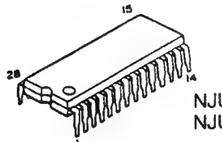
NJU7311L
NJU7313L

2/4

Y05-2840-10

# KR-694/V5560/V6060

KENWOOD

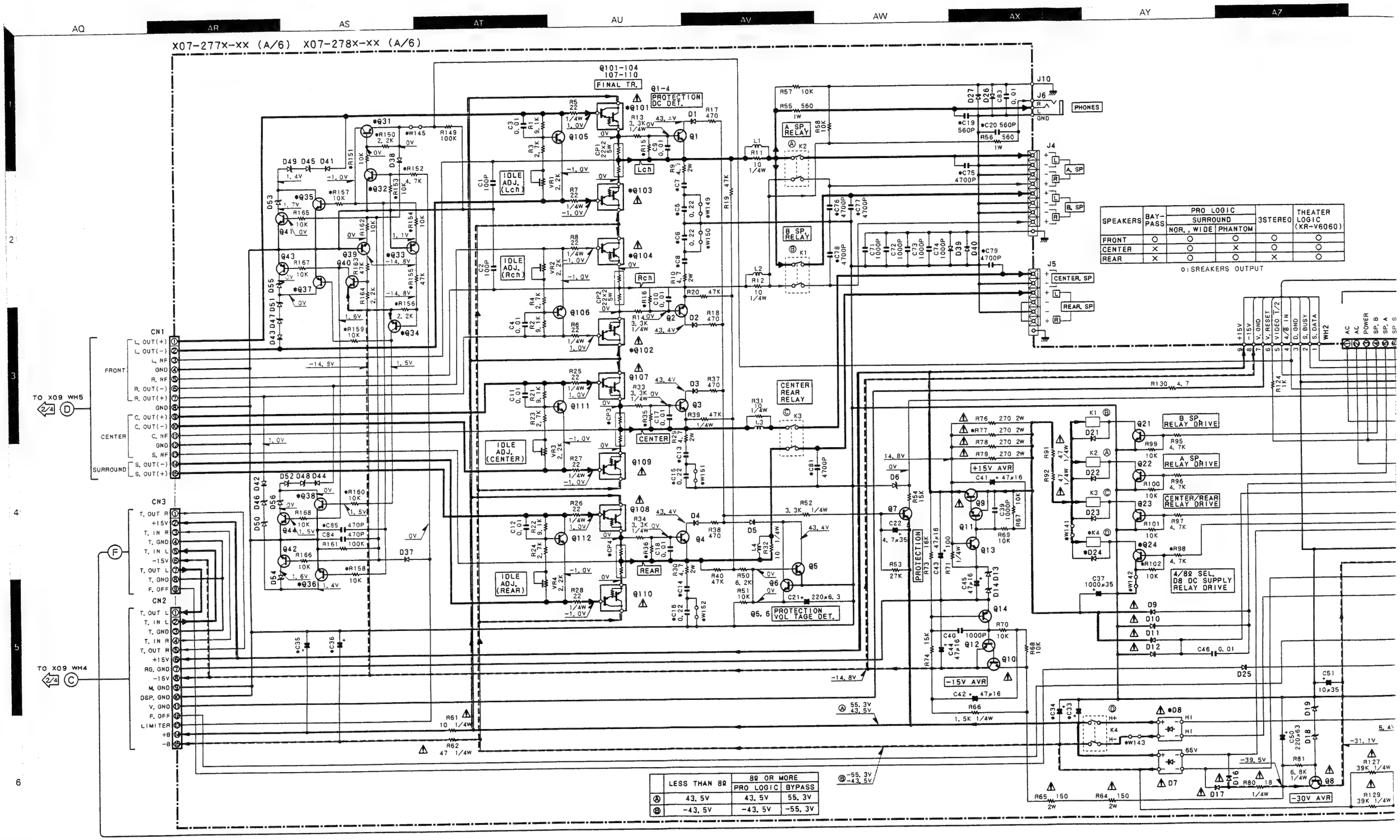


| SPEAKERS | BAY-PASS | PRO LOGIC SURROUND NOR., WIDE | PRO LOGIC SURROUND PHANTOM | 3STEREO | THEATER LOGIC (KR-V6060) |
|---|---|---|---|---|---|
| FRONT | ○ | ○ | ○ | ○ | ○ |
| CENTER | × | ○ | × | ○ | ○ |
| REAR | × | ○ | ○ | × | ○ |

○: SREAKERS OUTPUT

| | LESS THAN 8Ω | 8Ω OR MORE PRO LOGIC | 8Ω OR MORE BYPASS |
|---|---|---|---|
| Ⓐ | 43.5V | 43.5V | 55.3V |
| Ⓑ | -43.5V | -43.5V | -55.3V |

| Ref. NO. / DESTINATION | | | | CN7, 8 S2 | CN9, 10 | Q24, 31~38 | Q8, 24 | C7, 8, 13, 14 | C5, 6 15, 16 | W149~152 | C19, 20 | C33, 34 | C35 | C36 | C47, 48 85 | C49, 52, 75~79 81 | R15, 16 | R35, 36 | R77 | R98, 152 | R102, 151, 153 154, 157~160 | R119 | R150, 156 | R155 | R179 | CP3, 4 | J1 | J3 | J11, 12 | K4 | S1 | Q101, 102 | Q103, 104 |
|---|---|---|---|---|---|---|---|---|---|---|---|---|---|---|---|---|---|---|---|---|---|---|---|---|---|---|---|---|---|---|---|---|---|
| KR-V6060 | X07-277 | 0-10 | K, R | NO | NO | YES | YES | 0.1μ | NO | YES | NO | 6800μ71 | 10μ100 | 330μ100 | YES | NO | 910 | 680 | NO | YES | YES | 3.3M 1/2W | YES | YES | YES | 0.33×2 5W | NO | YES | NO | YES | YES | 2SD2222BT | 2SB1470BT |
| | | 1-01 | P | | | | | | YES | NO | | | | | | | | | | | | | | | | | | | | | | | |
| | X07-278 | 2-70 | E | | YES | | | 0.22μ | NO | YES | YES | | | | | | | | YES | | | NO | | | | | YES | NO | YES | | | | |
| | | 0-21 | M | YES | | | | | | | | | | | | YES | | | | | | | | | | | | | | | | | |
| | | 2-91 | Y | | NO | | | 0.1μ | | | NO | | | | | NO | | | NO | | | | | | | | NO | YES | NO | | | | |
| | | 0-51 | T | NO | YES | | | | | | | | | | | | | | | | | 3.3M 1/2W | | | | | | NO | YES | | | | |
| KR-V5560 | X07-277 | 0-11 | K, R | NO | NO | NO | NO | 0.1μ | NO | YES | NO | 6800μ63 | 10μ63 | 330μ63 | NO | NO | 1.1K | 1.1K | NO | NO | NO | 3.3M 1/2W | NO | NO | NO | 0.22×2 5W | NO | YES | NO | NO | NO | 2SD2255BT | 2SB1493BT |
| | | 1-02 | P | | | | | | | | | | | | | | | | | | | NO | | | | | | NO | YES | | | | |
| | X07-278 | 0-22 | M | YES | YES | | | | | | | | | | | | | | | | | | | | | | | YES | NO | | | | |
| | | 2-92 | Y | | NO | | | | | | | | | | | | | | | | | | | | | | | NO | | | | | |
| | | 0-71 | X | NO | | | | | | | | | | | | | | | | | | | | | | | | | | | | | |
| KR-694 | X07-277 | 0-11 | K | NO | NO | NO | NO | 0.1μ | NO | YES | NO | 6800μ63 | 10μ63 | 330μ63 | NO | NO | 1.1K | 1.1K | NO | NO | NO | 3.3M 1/2W | NO | NO | NO | 0.22×2 5W | NO | YES | NO | NO | NO | 2SD2255BT | 2SB1493BT |
| | | 1-02 | P | | | | | | | | | | | | | | | | | | | NO | | | | | | NO | YES | | | | |
| | X07-278 | 0-22 | M | YES | YES | | | | | | | | | | | | | | | | | | | | | | | | | | | | |

| Ref. NO. / DESTINATION | | | | WH3 | WH6~12 | WH13, 14 | W141~143 145 | W148 | W153 | W154 | F1 | F2 | F3 | F6 |
|---|---|---|---|---|---|---|---|---|---|---|---|---|---|---|
| KR-V6060 | X07-277 | 0-10 | K, R | NO | NO | NO | YES | YES | NO | YES | 6A 125V | NO | NO | 1A 250V |
| | | 1-01 | P | | | | | | | | | | | |
| | X07-278 | 2-70 | E | YES | | YES | | NO | YES | NO | T3.15A L 250V | T3.15A L 250V | T2.5A L 250V | T1A L 250V |
| | | 0-21 | M | NO | YES | | | YES | NO | | | | NO | |
| | | 2-91 | Y | | | NO | | YES | NO | YES | | | T2.5A L 250V | |
| | | 0-51 | T | | NO | YES | | NO | YES | YES | | NO | | |
| KR-V5560 | X07-277 | 0-11 | K, R | NO | NO | NO | NO | YES | NO | YES | 6A125V | NO | NO | 1A 250V |
| | | 1-02 | P | | | | | | | | | | | |
| | X07-278 | 0-22 | M | | YES | YES | | NO | YES | NO | T3.15A L 250V | T3.15A L 250V | T2.5A L 250V | T1A L 250V |
| | | 2-92 | Y | | | NO | | YES | NO | | | | NO | |
| | | 0-71 | T | | NO | | | NO | | YES | | NO | | |
| KR-V694 | X07-277 | 0-11 | K | NO | NO | NO | NO | YES | NO | YES | 6A 250V | NO | NO | 1A 250V |
| | | 1-02 | P | | | | | | | | | | | |
| | X07-278 | 0-22 | M | | YES | YES | | NO | YES | NO | T3.15A L 250V | T3.15A L 250V | T2.5A L 250V | T1A L 250V |

| | |
|---|---|
| IC1 | :NJM2279D |
| Q1~6, 35, 36 41, 42 | :2SC1845(F, E) |
| Q7, 37, 38 43, 44 | :2SA992(F, E) |
| Q8 | :2SA1534A(R, S) |
| Q9, 10 | :2SD2374 or 2SD2012 or 2SD2061 |
| Q11, 13, 21~24 32, 34, 40 | :2SC1740S(Q, R) or 2SC2785(F, E) |
| Q12, 14, 31 33, 39 | :2SA933S(Q, R) or 2SA1175(F, E) |
| Q25 | :2SC3940A(R, S) |
| Q26 | :2SC2003(L, K) |
| Q101, 102 | :* |
| Q103, 104 | :* |
| Q105, 106 111, 112 | :2SC4137F19(V, W) |
| Q107, 108 | :2SD2255BT |
| D1~5, 28, 29 41~44 | :HSS104A or 1SS131 |
| D6, 53~56 60, 61 | :RD5.1ES(B2) or HZS5.1N(B2) |
| D7, 8 | :D5SBA20F03 or RBV-602LFA |
| D9~12, 16, 17 30~33 | :S5688B or 1SR139-100 |
| D13, 34 | :RD6.2ES(B2) or HZS6.2N(B2) |
| D14 | :RD8.2ES(B2) or HZS8.2N(B2) |
| D15 | :RD2.7ES(B2) or HZS2.7N(B2) |
| D18, 19 | :RD16ES(B2) or HZS16N(B2) |
| D21~27, 35, 37~40 58, 59, 62, 63 | :HSS104 or 1SS133 |
| D45~52 | :RD13ES(B2) or HZS13N(B2) |

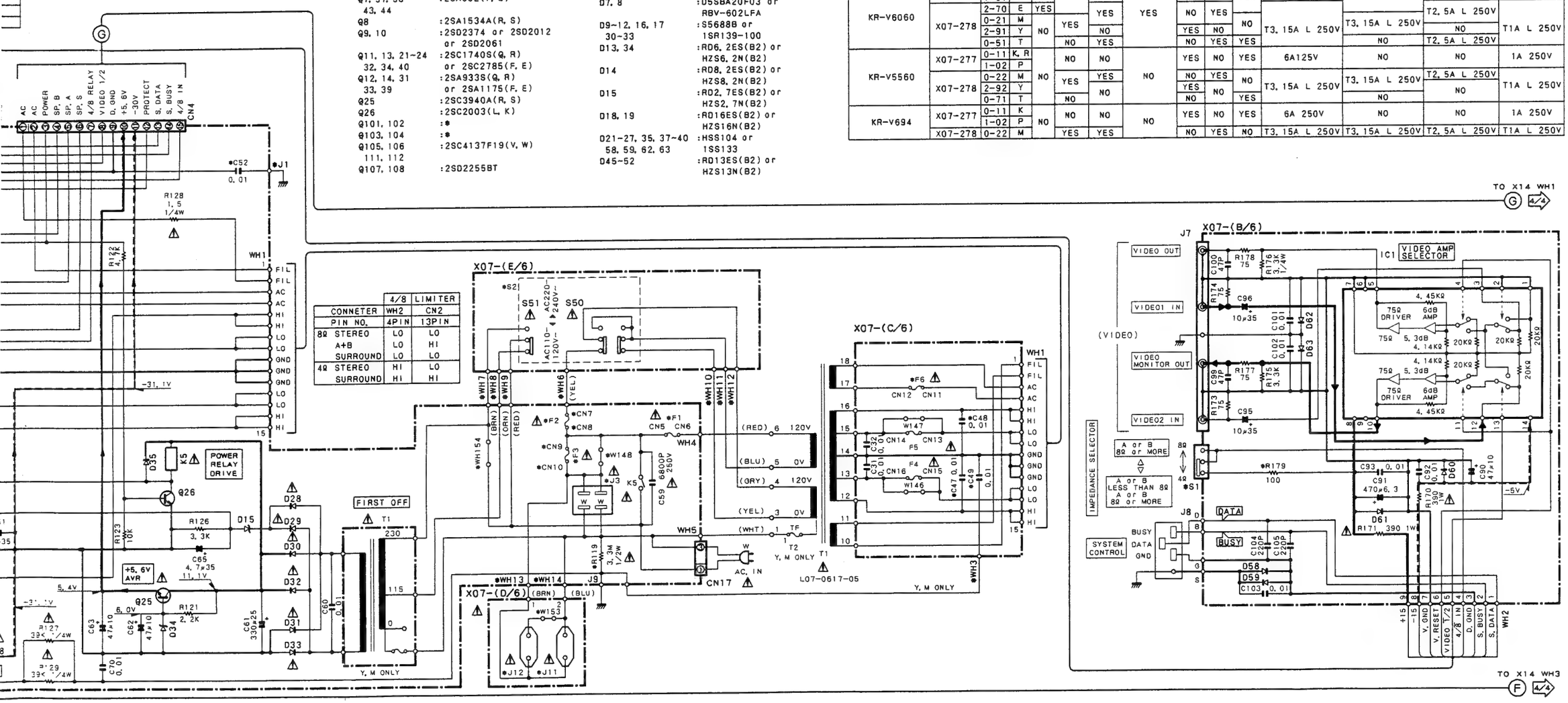


| | 4/8 | LIMITER |
|---|---|---|
| CONNETER | WH2 | CN2 |
| PIN NO. | 4PIN | 13PIN |
| 8Ω STEREO | LO | LO |
| A+B | LO | HI |
| SURROUND | LO | LO |
| 4Ω STEREO | HI | LO |
| SURROUND | HI | HI |

DC voltages are as measured with a high impedance voltmeter. Values may vary slightly due to variations between individual instruments or/and units.

Les tensions c.c. doivent être mesurées avec un voltmètre à haute impédance. Les valeurs peuvent différer légèrement du fait des variations inhérentes aux appareils et aux instruments de mesure individuels.

Die angegebenen Gleichspannungswerte wurden mit einem hochohmigen Spannungsmesser gemessen. Dabei schwanken die Meßwerte aufgrund von Unterschieden zwischen einzelnen Instrumenten oder Geräten u. U.geringfügig.

CAUTION: For continued safety, replace safety critical components only with manufacturer's recommended parts (refer to parts list) ⚠ Indicates safety critical components. To reduce the risk of electric shock, leakage-current or resistance measurements shall be carried out (exposed parts are acceptably insulated from the supply circuit) before the appliance is returned to the customer.

SIGNAL LINE
GND LINE
+B LINE
-B LINE

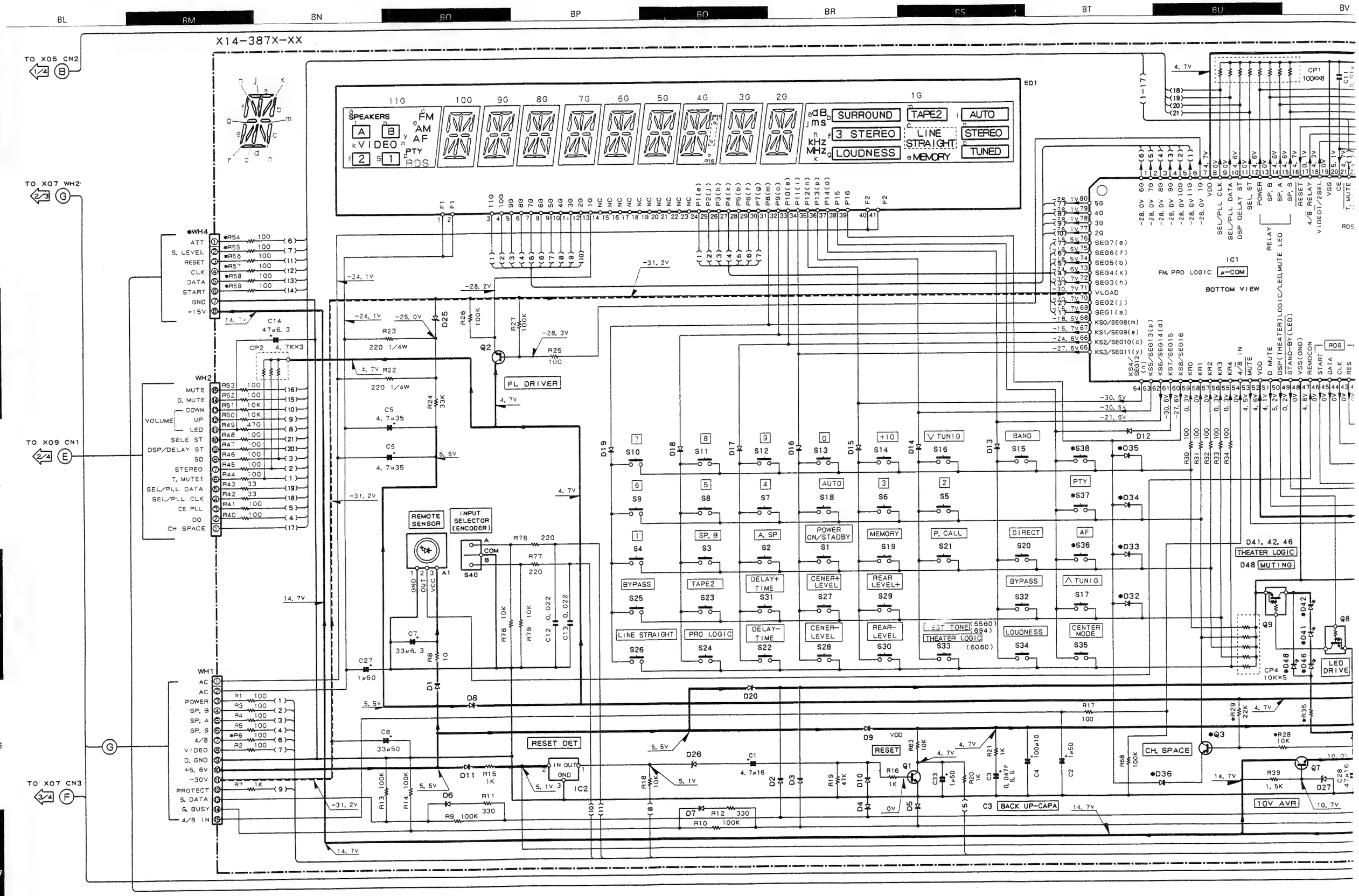
X14-387X-XX
TO X05 CN2
TO X07 WH2
TO X09 CN1
TO X07 CN3
ED1
SPEAKERS
VIDEO
FM
AM
AF
PTY
RDS
SURROUND
3 STEREO
LOUDNESS
TAPE2
LINE STRAIGHT
MEMORY
AUTO
STEREO
TUNED
IC1
FM PRO LOGIC
μ-COM
BOTTOM VIEW
FL DRIVER
REMOTE SENSOR
INPUT SELECTOR (ENCODER)
S40
RESET DET
IC2
RESET
CH. SPACE
BACK UP-CAPA
10V AVR
LED DRIVE
THEATER LOGIC
MUTING
D41, 42, 46
D48
CP1 100KX8
CP2 4.7KX3
CP4 10KX5
WH1
WH4
WH2
VOLUME
S. LEVEL
RESET
CLK
DATA
START
GND
+15V
MUTE
D. MUTE
DOWN
UP
LED
SELE ST
DSP/DELAY ST
SD
STEREO
T. MUTE1
SEL/PLL DATA
SEL/PLL CLK
CE PLL
DO
CH SPACE
AC
POWER
SP. B
SP. A
SP. S
4/8
VIDEO
D. GND
+5. 6V
-30V
PROTECT
S. DATA
S. BUSY
4/8 IN
SP. B
A. SP
POWER ON/STADBY
MEMORY
P. CALL
DIRECT
AF
BYPASS
TAPE2
DELAY+ TIME
CENER+ LEVEL
REAR LEVEL+
TUNIG
LINE STRAIGHT
PRO LOGIC
DELAY- TIME
CENER- LEVEL
REAR- LEVEL
TEST TONE (5560) (694) (6060)
LOUDNESS
CENTER MODE
BAND
PTY
AUTO
+10
TUNIG
SEL/PLL CLK
SEL/PLL DATA
DSP DELAY ST
SEL, ST
POWER
SP. B
SP. A
SP. S
RESET
4/8 RELAY
VIDEO1/2SEL
VSS
CE
T. MUTE
RELAY
SEG7(e)
SEG6(f)
SEG5(b)
SEG4(k)
SEG3(h)
VLOAD
SEG2(j)
SEG1(a)
KS0/SEG8(m)
KS1/SEG9(e)
KS2/SEG10(c)
KS3/SEG11(y)
KS4/SEG12(g)
KS5/SEG13(p)
KS6/SEG14(d)
KS7/SEG15
KS8/SEG16
KR0
KR1
KR2
KR3
KR4
4/8 IN
MUTE
VDD
D MUTE
DSP(THEATER)LOGIC/LED,MUTE LED
STAND-BY(LED)
VSS(GND)
REMOCON
START
DATA
CLK
RES
RDS

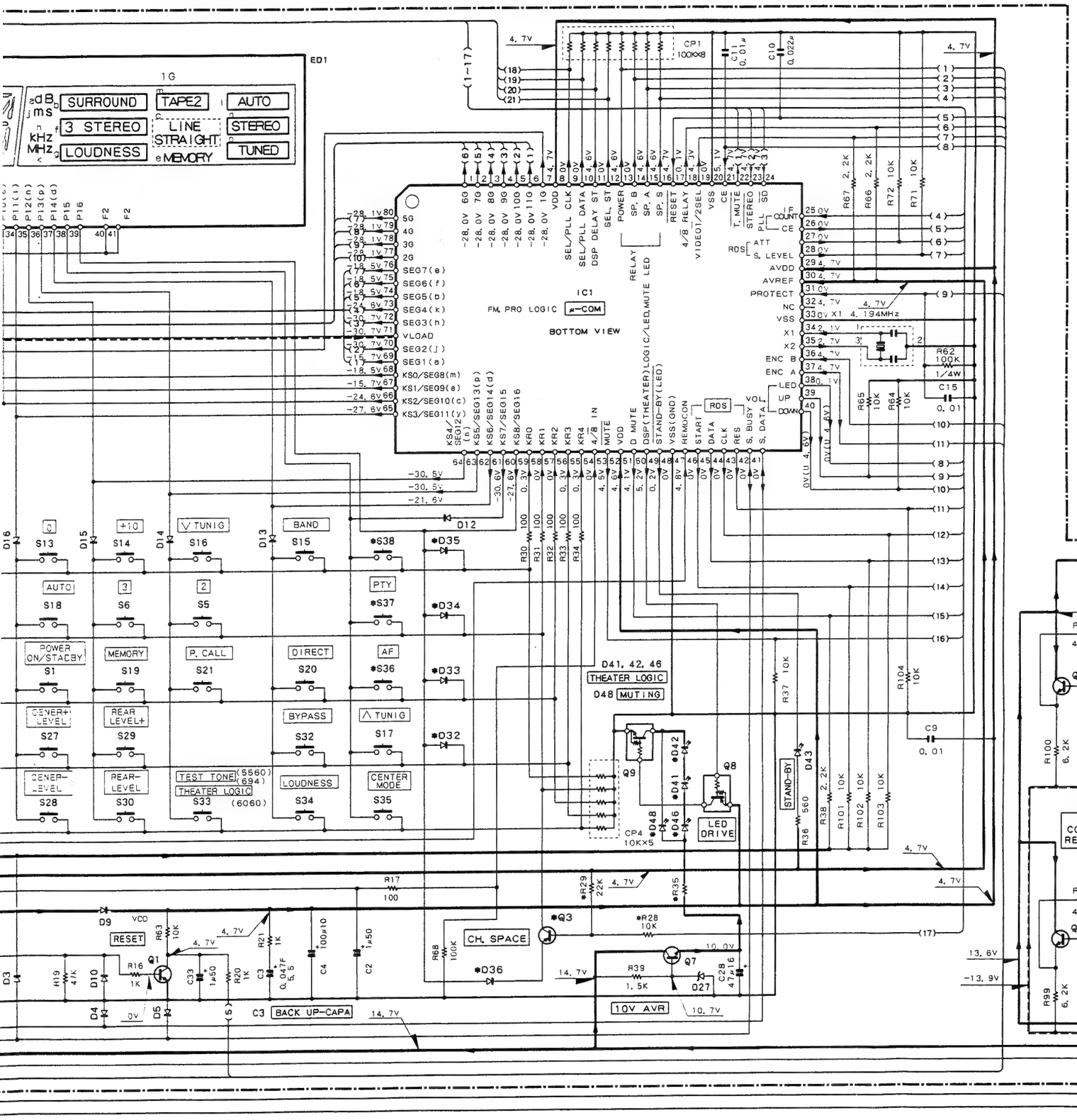


X09-D/5 KR-V6060(E.T TYP) (RDS UNIT)

X09 D/5
IC201 : TDA7330B
IC202 : LC6543H-4600

D301 : HZS5.1N(B2)or
RD5.1ES(B2)

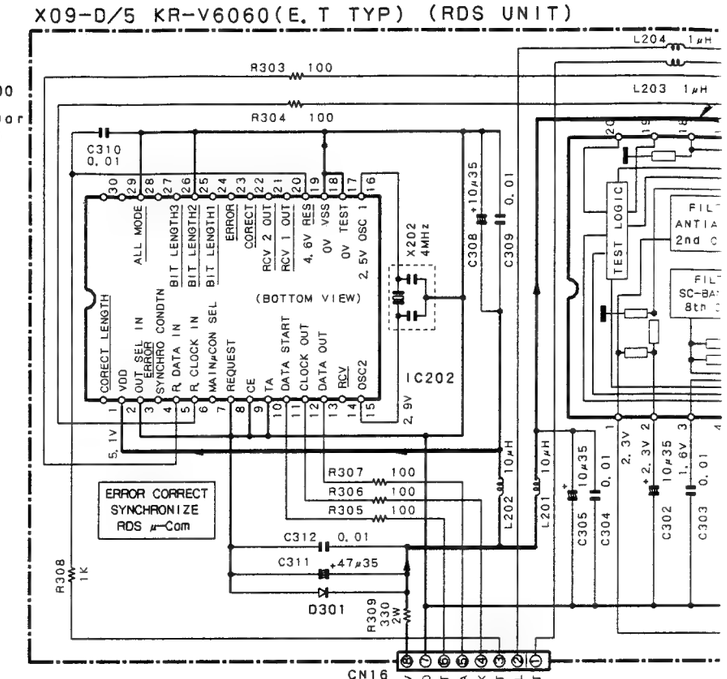


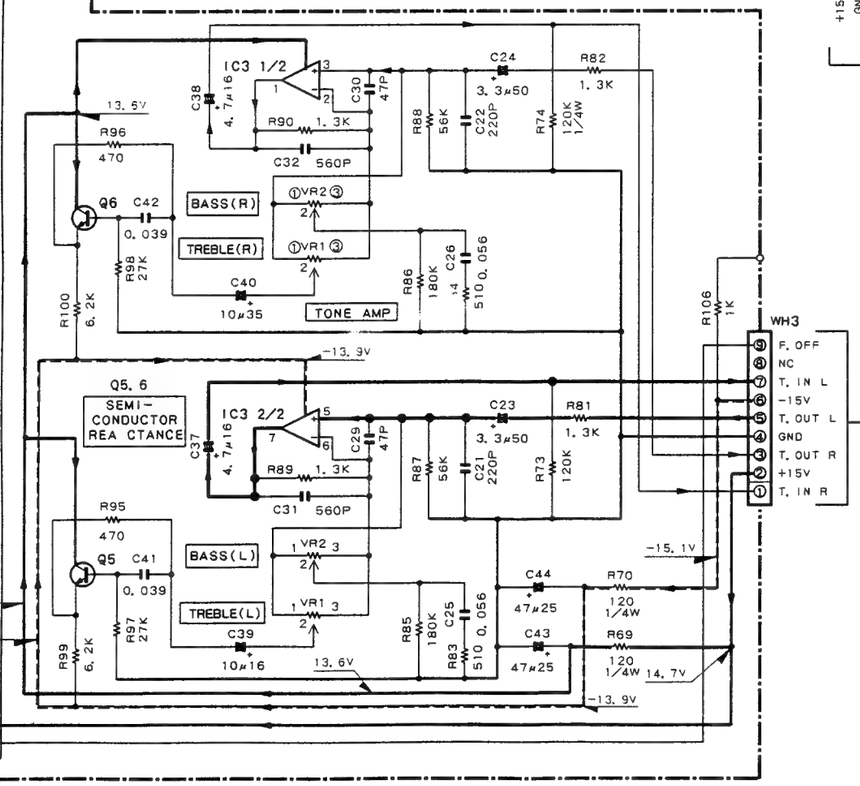


X14-387

| | |
|---|---|
| IC1 | : μPD78043GF |
| IC1 | : μPD78044GF |
| IC2 | : S-80740AL |
| IC3 | : NJM4580D-D |
| Q1, 2, 5-6 | : 2SC1740S(Q |
| Q3 | : 2SA933S(Q, |
| Q7 | : 2SC1845(F, |
| Q8 | : DTA124ES C |
| Q9 | : DTC124ES C |
| D1~20, 32~36 | : HSS104 |
| D26 | : HZS2.7( |
| D25 | : HZS6.2N |
| D43, 48 | : B30-24 |
| D41, 42, 46 | : B30-24 |
| D27 | : HZS11N( |
| A1 | : W02-104 |
| | : W02-115 |
| | : W02-11 |
| ED1 | : 11-MT-S |

X14-388

| Ref NO. / DESTINATION | | |
|---|---|---|
| KR-V6060 | 0-01 | K, R, P |
| | 0-21 | M, Y |
| | 2-71 | T, E |
| KR-V5560 | 0-11 | K, R, P |
| | 0-22 | M, Y |
| | 0-71 | X |
| KR-894 | 0-11 | K, P |
| | 0-22 | M |

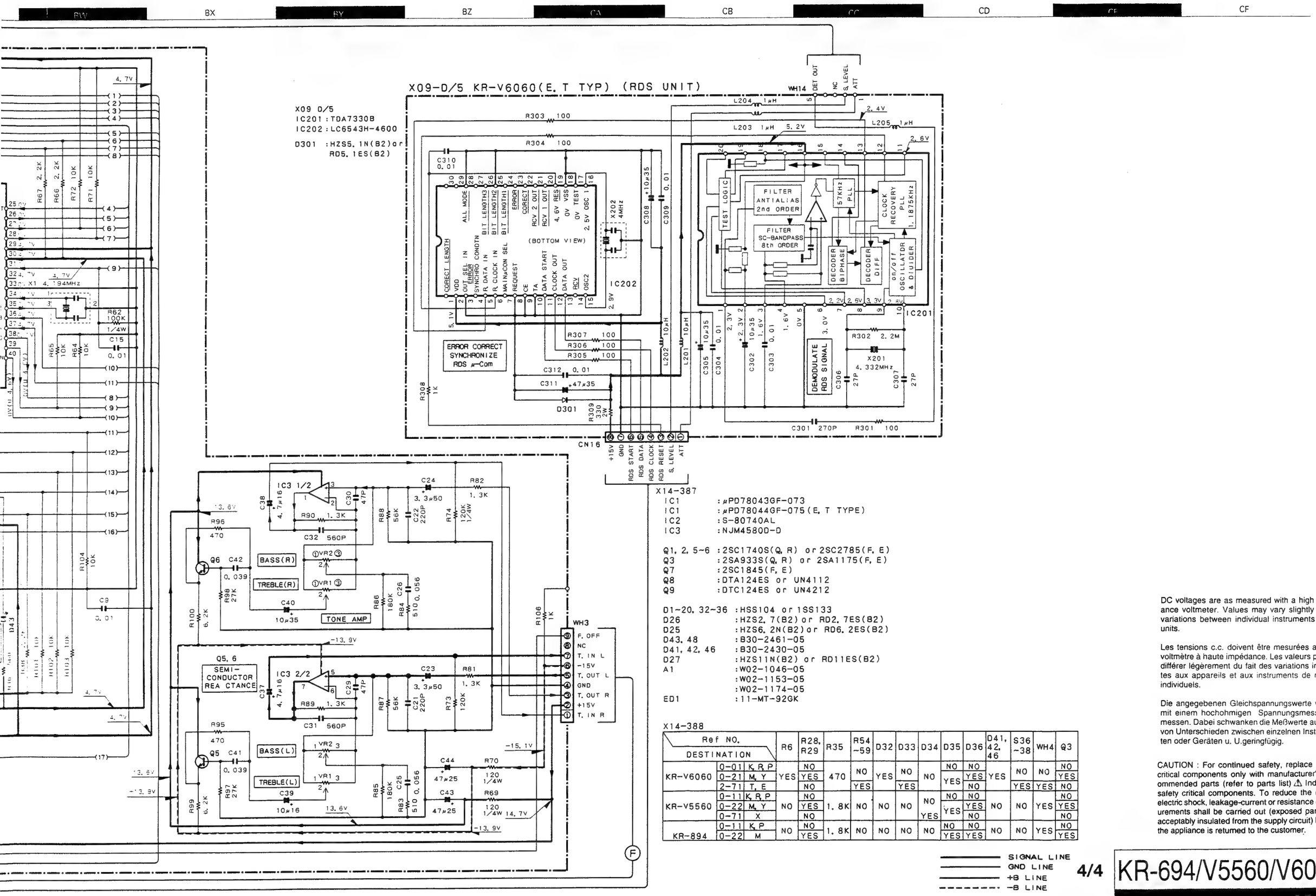


X14-387

| | |
|---|---|
| IC1 | : μPD78043GF-073 |
| IC1 | : μPD78044GF-075(E, T TYPE) |
| IC2 | : S-80740AL |
| IC3 | : NJM4580D-D |
| Q1, 2, 5~6 | : 2SC1740S(Q, R) or 2SC2785(F, E) |
| Q3 | : 2SA933S(Q, R) or 2SA1175(F, E) |
| Q7 | : 2SC1845(F, E) |
| Q8 | : DTA124ES or UN4112 |
| Q9 | : DTC124ES or UN4212 |
| D1~20, 32~36 | : HSS104 or 1SS133 |
| D26 | : HZS2.7(B2) or RD2.7ES(B2) |
| D25 | : HZS6.2N(B2) or RD6.2ES(B2) |
| D43, 48 | : B30-2461-05 |
| D41, 42, 46 | : B30-2430-05 |
| D27 | : HZS11N(B2) or RD11ES(B2) |
| A1 | : W02-1046-05 |
| | : W02-1153-05 |
| | : W02-1174-05 |
| ED1 | : 11-MT-92GK |

X14-388

| Ref NO. / DESTINATION | | | R6 | R28, R29 | R35 | R54 ~59 | D32 | D33 | D34 | D35 | D36 | D41, 42, 46 | S36 ~38 | WH4 | Q3 |
|---|---|---|---|---|---|---|---|---|---|---|---|---|---|---|---|
| KR-V6060 | 0-01 | K, R, P | YES | NO | 470 | NO | YES | NO | NO | NO | NO | YES | NO | NO | NO |
| | 0-21 | M, Y | | YES | | | | | | YES | YES | | | | YES |
| | 2-71 | T, E | | NO | | YES | | YES | | | NO | | YES | YES | NO |
| KR-V5560 | 0-11 | K, R, P | NO | NO | 1.8K | NO | NO | NO | NO | NO | NO | NO | NO | YES | NO |
| | 0-22 | M, Y | | YES | | | | | | YES | YES | | | | YES |
| | 0-71 | X | | NO | | | | | YES | | NO | | | | NO |
| KR-894 | 0-11 | K, P | NO | NO | 1.8K | NO | NO | NO | NO | NO | NO | NO | NO | YES | NO |
| | 0-22 | M | | YES | | | | | | YES | YES | | | | YES |

DC voltages are as measured with a high impedance voltmeter. Values may vary slightly due to variations between individual instruments or/and units.

Les tensions c.c. doivent être mesurées avec un voltmètre à haute impédance. Les valeurs peuvent différer légèrement du fait des variations inhérentes aux appareils et aux instruments de mesure individuels.

Die angegebenen Gleichspannungswerte wurden mit einem hochohmigen Spannungsmesser gemessen. Dabei schwanken die Meßwerte aufgrund von Unterschieden zwischen einzelnen Instrumenten oder Geräten u. U.geringfügig.

CAUTION : For continued safety, replace safety critical components only with manufacturer's recommended parts (refer to parts list) ⚠ Indicates safety critical components. To reduce the risk of electric shock, leakage-current or resistance measurements shall be carried out (exposed parts are acceptably insulated from the supply circuit) before the appliance is returned to the customer.

SIGNAL LINE
GND LINE
+B LINE
−B LINE

4/4

Y05-2840-10

KR-694/V5560/V6060

KENWOOD

 KR-694/V5560/V6060

# EXPLODED VIEW (UNIT)

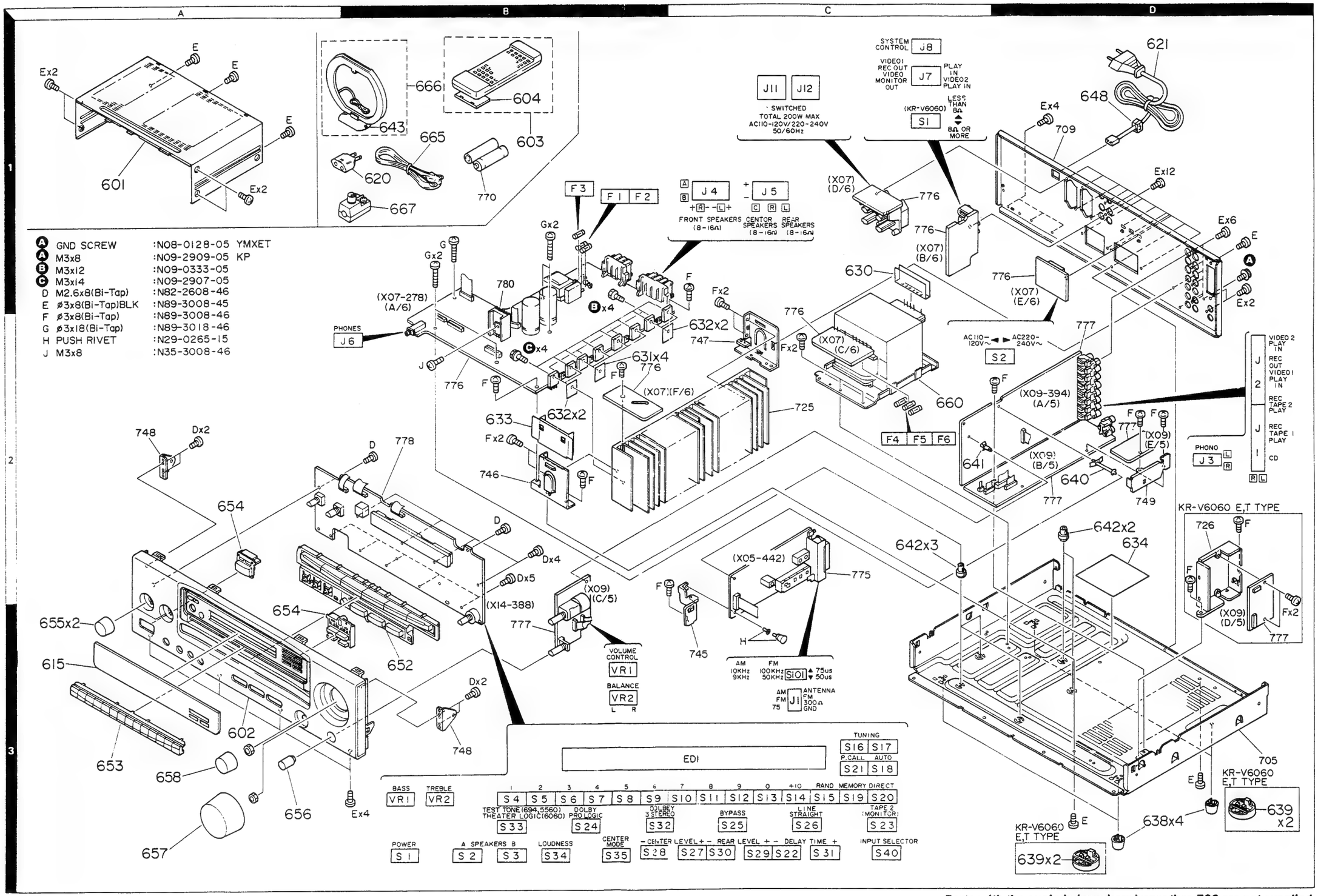




Parts with the exploded numbers larger than 700 are not supplied.

# KR-694/V5560/V6060
# PARTS LIST

## UNIT LIST

### KR-694

| DESTINATION | | TUNER UNIT | MAIN AMP UNIT | AUDIO UNIT | DISPLAY UNIT |
|---|---|---|---|---|---|
| Sigapore made | K | X05-4460-11 | X07-2770-11 | X09-3940-11 | X14-3880-11 |
| | P | X05-4460-11 | X07-2771-02 | X09-3940-11 | X14-3880-11 |
| | M | X05-4460-21 | X07-2780-22 | X09-3940-11 | X14-3880-22 |
| Malaysia made | K | X05-4460-11 | X07-2770-11 | X09-3940-11 | X14-3880-11 |
| | P | X05-4460-11 | X07-2771-02 | X09-3940-11 | X14-3880-11 |

### KR-V5560

| DESTINATION | | TUNER UNIT | MAIN AMP UNIT | AUDIO UNIT | DISPLAY UNIT |
|---|---|---|---|---|---|
| Sigapore made | K | X05-4460-11 | X07-2770-11 | X09-3940-11 | X14-3880-11 |
| | P | X05-4460-11 | X07-2771-02 | X09-3940-11 | X14-3880-11 |
| | Y | X05-4460-21 | X07-2782-92 | X09-3940-11 | X14-3880-22 |
| | M | X05-4460-21 | X07-2780-22 | X09-3940-11 | X14-3880-22 |
| | X | X05-4460-71 | X07-2780-11 | X09-3940-11 | X14-3880-71 |
| | R | X05-4460-11 | X07-2770-11 | X09-3940-11 | X14-3880-11 |
| Malaysia made | K | X05-4460-11 | X07-2770-11 | X09-3940-11 | X14-3880-11 |
| | P | X05-4460-11 | X07-2771-02 | X09-3940-11 | X14-3880-11 |
| | R | X05-4460-11 | X07-2770-11 | X09-3940-11 | X14-3880-11 |

### KR-V6060

| DESTINATION | | TUNER UNIT | MAIN AMP UNIT | AUDIO UNIT | DISPLAY UNIT |
|---|---|---|---|---|---|
| Sigapore made | K | X05-4460-11 | X07-2770-10 | X09-3940-10 | X14-3880-10 |
| | P | X05-4460-11 | X07-2771-01 | X09-3940-10 | X14-3880-10 |
| | R | X05-4460-11 | X07-2770-10 | X09-3940-10 | X14-3880-10 |
| | Y | X05-4460-21 | X07-2782-91 | X09-3940-10 | X14-3880-21 |
| | M | X05-4460-21 | X07-2780-21 | X09-3940-10 | X14-3880-21 |
| | T | X05-4472-72 | X07-2780-51 | X09-3942-71 | X14-3882-71 |
| | E | X05-4472-72 | X07-2782-70 | X09-3942-71 | X14-3882-71 |
| Malaysia made | K | X05-4460-11 | X07-2770-10 | X09-3940-10 | X14-3880-10 |
| | P | X05-4460-11 | X07-2771-01 | X09-3940-10 | X14-3880-10 |
| | R | X05-4460-11 | X07-2770-10 | X09-3940-10 | X14-3880-10 |



* New Parts
Parts without Parts No. are not supplied.
Les articles non mentionnes dans le Parts No. ne sont pas fournis.
Teile ohne Parts No. werden nicht geliefert.

No.1

| Ref. No. 参照番号 | Address 位置 | New Parts 新 | Parts No. 部品番号 | Description 部品名／規格 | Destination 仕向 | Remarks 備考 |
|---|---|---|---|---|---|---|
| | | | **KR-694** | | | |
| 601 | 1A | * | A01-3098-11 | METALLIC CABINET | | |
| 602 | 3A | * | A60-0527-11 | PANEL | | |
| 603 | 1B | * | A70-0964-05 | REMOTE CONTROLLER ASSY(-R0502) | | |
| 604 | 1B | | A09-0170-08 | BATTERY COVER | | |
| 615 | 3A | * | B03-2887-13 | DRESSING PLATE | | |
| - | | | B46-0092-33 | WARRANTY CARD | K | |
| - | | | B46-0121-33 | WARRANTY CARD | P | |
| - | | | B46-0197-00 | QUESTIONAIRE CARD | K | |
| - | | * | B58-0964-03 | CAUTION CARD (UL) | K | |
| - | | * | B58-0965-03 | CAUTION CARD (P,T,X TYPE) | P | |
| - | | * | B58-0966-03 | CAUTION CARD (ELM TYPE) | M | |
| - | | * | B60-1453-00 | INSTRUCTION MANUAL (ENGLISH) | | |
| - | | * | B60-1454-00 | INSTRUCTION MANUAL (FRENCH) | P | |
| - | | * | B60-1455-00 | INSTRUCTION MANUAL (CHINESE) | M | |
| - | | * | B60-1456-00 | INSTRUCTION MANUAL (SPANISH) | M | |
| ⚠ 620 | 1B | | E03-0115-05 | AC PLUG ADAPTER | M | |
| ⚠ 621 | 1D | | E30-2592-15 | AC POWER CORD | M | |
| ⚠ 621 | 1D | | E30-2650-05 | AC POWER CORD | KPR | |
| ⚠ 621 | 1D | | E30-2650-05 | AC POWER CORD | P | |
| 631 | 2B | | F20-1297-05 | INSULATING SHEET (FRONT) | | |
| 632 | 2B,2C | | F20-1297-05 | INSULATING SHEET (CENTER,REAR) | | |
| 633 | 2B | * | F20-1392-04 | INSULATING BOARD | | |
| 634 | 2D | | F20-1393-04 | INSULATING SHEET | M | |
| - | | * | H10-5676-02 | POLYSTYRENE FOAMED FIXTURE (L) | KPM | S |
| - | | * | H10-5677-02 | POLYSTYRENE FOAMED FIXTURE (R) | KPM | S |
| - | | | H10-5680-02 | POLYSTYRENE FOAMED FIXTURE (L) | KP | W |
| - | | | H10-5681-02 | POLYSTYRENE FOAMED FIXTURE (R) | KP | W |
| - | | * | H11-0061-04 | POLYSTYRENE FOAMED BOARD | | |
| - | | * | H13-0147-14 | CARTON BOARD | | |
| - | | | H25-0232-04 | PROTECTION BAG (235X350X0.03) | | |
| - | | | H25-1516-04 | PROTECTION BAG | | |
| - | | * | H50-0931-04 | ITEM CARTON CASE | KP | S |
| - | | * | H50-0932-04 | ITEM CARTON CASE | M | S |
| - | | * | H50-0987-04 | ITEM CARTON CASE | KP | W |
| 638 | 3D | | J02-0366-15 | FOOT | | |
| 640 | 2D | | J19-3208-05 | UNIT HOLDER | | |
| 641 | 2C | | J19-3326-15 | UNIT HOLDER | | |
| 642 | 2C,2D | * | J19-3657-04 | UNIT HOLDER(USABLE J19-3609-04 | | |
| 643 | 1B | * | J19-3645-04 | AM LOOP ANT.STAND | | |
| ⚠ 648 | 1D | | J42-0083-05 | POWER CORD BUSHING | | |
| - | | | J61-0307-05 | WIRE BAND | | |
| 652 | 3B | * | K29-5843-02 | KNOB (SURROUND) | | |
| 653 | 3A | | K29-5834-13 | KNOB (10KEY) | | |
| 654 | 2A,3A | | K29-5837-02 | KNOB (POWER,TUNING) | | |
| 655 | 3A | | K29-5838-04 | KNOB (BASS,TREBLE) | | |
| 656 | 3A | | K29-5839-14 | KNOB (BARANCE) | | |
| 657 | 3A | * | K29-5860-04 | KNOB ASSY (VOLIUME) | | |
| 658 | 3A | | K29-5866-04 | KNOB (INPUT SELECTOR) | | |
| ⚠ 660 | 2C | * | L07-0848-05 | POWER TRANSFORMER | P | |
| ⚠ 660 | 2C | * | L07-0851-05 | POWER TRANSFORMER | M | |

L:Scandinavia K:USA P:Canada R:Mexico
Y:PX(Far East, Hawaii) T:England E:Europe G:Germany
Y:AAFES(Europe) X:Australia M:Other Areas

S:Singapore made
W:Malaysia made

4:KR-694
5:KR-V5560
6:KR-V6060

⚠ indicates safety critical components.

# KR-694/V5560/V6060 PARTS LIST

* New Parts
Parts without Parts No. are not supplied
Les articles non mentionnes dans le Parts No. ne sont pas fournis.
Telle ohne Parts No. werden nicht geliefert.

**No.2**

| Ref. No. 参照番号 | Address 位置 | New Parts 新 | Parts No. 部品番号 | Description 部品名／規格 | Destination 仕向 | Remarks 備考 |
|---|---|---|---|---|---|---|
| ⚠ 660 | 2C | * | L07-0852-05 | POWER TRANSFORMER | K | |
| A | | | N08-0128-35 | BINDING POST (EARTH) | M | |
| A | | | N09-2909-05 | TAPTITE SCREW | KP | |
| B | | | N09-0333-05 | TAPPING SCREW (3X12) | | |
| C | | | N09-2907-05 | SEMS (TAPTITE SCREW)(3X14) | | |
| D | | | N82-2608-46 | BINDIG HEAD TAPTITE SCREW | | |
| E | | | N89-3008-45 | BINDING HEAD TAPTITE SCREW | | |
| F | | | N89-3008-46 | BINDING HEAD TAPTITE SCREW | | |
| G | | | N89-3018-46 | BINDING HEAD TAPTITE SCREW | | |
| H | | | N29-0265-15 | PUSH RIVET | | |
| 665 | 1B | | T90-0175-05 | T TYPE ANTENNA | | |
| 666 | 1B | | T90-0195-05 | LOOP ANTENNA | | |
| **KR-V5560** | | | | | | |
| 601 | 1A | * | A01-3098-11 | METALLIC CABINET | | |
| 602 | 3A | * | A60-0526-21 | PANEL | | |
| 603 | 1B | * | A70-0964-05 | REMOTE CONTROLLER ASSY(-R0502) | | |
| 604 | 1B | | A09-0170-08 | BATTERY COVER | | |
| 615 | 3A | * | B03-2887-13 | DRESSING PLATE | | |
| - | | | B46-0092-33 | WARRANTY CARD | K | |
| - | | | B46-0094-03 | WARRANTY CARD | Y | |
| - | | | B46-0095-03 | WARRANTY CARD | Y | |
| - | | * | B46-0096-43 | WARRANTY CARD | X | |
| - | | | B46-0121-33 | WARRANTY CARD | P | |
| - | | | B46-0197-00 | QUESTIONAIRE CARD | KR | |
| - | | | B58-0513-04 | CAUTION CARD (PRESET220-240) | Y | |
| - | | * | B58-0964-03 | CAUTION CARD | KYR | |
| - | | * | B58-0965-03 | CAUTION CARD | P | |
| - | | * | B58-0966-03 | CAUTION CARD | MX | |
| - | | * | B58-0970-03 | CAUTION CARD | RR | |
| - | | * | B60-1453-00 | INSTRUCTION MANUAL (ENGLISH) | | |
| - | | * | B60-1454-00 | INSTRUCTION MANUAL (FRENCH) | P | |
| - | | * | B60-1455-00 | INSTRUCTION MANUAL (CHINESE) | M | |
| - | | * | B60-1456-00 | INSTRUCTION MANUAL (SPANISH) | MR | |
| ⚠ 620 | 1B | | E03-0115-05 | AC PLUG ADAPTER | M | |
| ⚠ 621 | 1D | | E30-2592-15 | AC POWER CORD | M | |
| ⚠ 621 | 1D | | E30-2605-05 | AC POWER CORD | Y | |
| ⚠ 621 | 1D | | E30-2650-05 | AC POWER CORD | KPR | |
| ⚠ 621 | 1D | | E30-2650-05 | AC POWER CORD | | |
| ⚠ 621 | 1D | | E30-2717-05 | AC POWER CORD | X | |
| 631 | 2B | | F20-1297-05 | INSULATING SHEET (FRONT) | | |
| 632 | 2B,2C | | F20-1297-05 | INSULATING SHEET (CENTER,REAR) | | |
| 633 | 2B | * | F20-1392-04 | INSULATING BOARD | | |
| 634 | 2D | | F20-1393-04 | INSULATING SHEET | YMX | |
| - | | * | H10-5676-02 | POLYSTYRENE FOAMED FIXTURE (L) | KPYMXR | |
| - | | * | H10-5677-02 | POLYSTYRENE FOAMED FIXTURE (R) | KPYMXR | |
| - | | | H10-5680-02 | POLYSTYRENE FOAMED FIXTURE (L) | KPR | |
| - | | | H10-5681-02 | POLYSTYRENE FOAMED FIXTURE (R) | KPR | |
| - | | * | H11-0061-04 | POLYSTYRENE FOAMED BOARD | | |
| - | | * | H13-0147-14 | CARTON BOARD | | |
| - | | | H25-0232-04 | PROTECTION BAG (235X350X0.03) | | |
| - | | | H25-0361-04 | PROTECTION BAG | | |
| - | | * | H50-0924-04 | ITEM CARTON CASE | KPYXR | S |

L:Scandinavia K:USA P:Canada R:Mexico
Y:PX(Far East, Hawaii) T:England E:Europe G:Germany
Y:AAFES(Europe) X:Australia M:Other Areas

S:Singapore made
W:Malaysia made

4:KR-694
5:KR-V5560
6:KR-V6060

⚠ indicates safety critical components.

* New Parts
Parts without Parts No. are not supplied.
Les articles non mentionnes dans le Parts No. ne sont pas fournis
Telle ohne Parts No. werden nicht geliefert.

**No.3**

| Ref. No. 参照番号 | Address 位置 | New Parts 新 | Parts No. 部品番号 | Description 部品名／規格 | Destination 仕向 | Remarks 備考 |
|---|---|---|---|---|---|---|
| - | | * | H50-0925-04 | ITEM CARTON CASE | M | S |
| - | | * | H50-0926-04 | ITEM CARTON CASE | KPR | W |
| 638 | 3D | | J02-0366-15 | FOOT | | |
| 640 | 2D | | J19-3208-05 | UNIT HOLDER | | |
| 641 | 2C | | J19-3326-15 | UNIT HOLDER | | |
| 642 | 2C,2D | * | J19-3657-04 | UNIT HOLDER(USABLE J19-3609-04 | | |
| 643 | 1B | * | J19-3645-05 | AM LOOP ANT.STAND | | |
| ⚠ 648 | 1D | | J42-0083-05 | POWER CORD BUSHING | | |
| - | | | J61-0307-05 | WIRE BAND | | |
| 652 | 3B | * | K29-5843-02 | KNOB (SURROUND) | | |
| 653 | 3A | | K29-5834-13 | KNOB (10KEY) | | |
| 654 | 2A,3A | | K29-5837-02 | KNOB (POWER,TUNING) | | |
| 655 | 3A | | K29-5838-04 | KNOB (BASS,TREBLE) | | |
| 656 | 3A | | K29-5839-14 | KNOB (BALANCE) | | |
| 657 | 3A | * | K29-5860-04 | KNOB ASSY (VOLUME) | | |
| 658 | 3A | | K29-5866-04 | KNOB (INPUT SELECTOR) | | |
| ⚠ 660 | 2C | * | L07-0848-05 | POWER TRANSFORMER | P | |
| ⚠ 660 | 2C | * | L07-0850-05 | POWER TRANSFORMER | X | |
| ⚠ 660 | 2C | * | L07-0851-05 | POWER TRANSFORMER | YM | |
| ⚠ 660 | 2C | * | L07-0852-05 | POWER TRANSFORMER | KR | |
| A | | | N08-0128-35 | BINDING POST (EARTH) | YMX | |
| A | | | N09-2909-05 | TAPTITE SCREW | KPR | |
| B | | | N09-0333-05 | TAPPING SCREW (3X12) | | |
| C | | | N09-2907-05 | SEMS (TAPTITE SCREW)(3X14) | | |
| D | | | N82-2608-46 | BINDIG HEAD TAPTITE SCREW | | |
| E | | | N89-3008-45 | BINDING HEAD TAPTITE SCREW | | |
| F | | | N89-3008-46 | BINDING HEAD TAPTITE SCREW | | |
| G | | | N89-3018-46 | BINDING HEAD TAPTITE SCREW | | |
| H | | | N29-0265-15 | PUSH RIVET | | |
| 665 | 1B | | T90-0175-05 | T TYPE ANTENNA | | |
| 666 | 1B | | T90-0195-05 | LOOP ANTENNA | | |
| **KR-V6060** | | | | | | |
| 601 | 1A | * | A01-3098-11 | METALLIC CABINET | | |
| 602 | 3A | * | A60-0525-21 | PANEL | | |
| 603 | 1B | | A70-0962-15 | REMOTE CONTROLLER ASSY(-R0702) | KPYMR | |
| 603 | 1B | | A70-0963-05 | REMOTE CONTROLLER ASSY(-R0703) | TE | |
| 604 | 1B | | A09-0146-08 | BATTEY COVER | | |
| 615 | 3A | * | B03-2871-13 | DRESSING PLATE | KPYMR | |
| 615 | 3A | * | B03-2886-13 | DRESSING PLATE | TE | |
| - | | | B46-0092-33 | WARRANTY CARD | K | |
| - | | | B46-0094-03 | WARRANTY CARD | Y | |
| - | | | B46-0095-03 | WARRANTY CARD | Y | |
| - | | | B46-0121-33 | WARRANTY CARD | P | |
| - | | | B46-0197-00 | QUESTIONAIRE CARD | KR | |
| - | | | B46-0310-03 | WARRANTY CARD | TE | |
| - | | | B58-0513-04 | CAUTION CARD (PRESET220-240) | Y | |
| - | | * | B58-0964-03 | CAUTION CARD (UL) | KYR | |
| - | | * | B58-0965-03 | CAUTION CARD (P,T,X) | P | |
| - | | * | B58-0966-03 | CAUTION CARD (E,L,M) | MTE | |
| - | | * | B58-0970-03 | CAUTION CARD (R TYPE) | R | |
| - | | | B60-1441-00 | INSTRUCTION MANUAL (ENGLISH) | KPYMR | |
| - | | | B60-1442-00 | INSTRUCTION MANUAL (ENGLISH) | TE | |

L:Scandinavia K:USA P:Canada R:Mexico
Y:PX(Far East, Hawaii) T:England E:Europe G:Germany
Y:AAFES(Europe) X:Australia M:Other Areas

S:Singapore made
W:Malaysia made

4:KR-694
5:KR-V5560
6:KR-V6060

⚠ indicates safety critical components.

# KR-694/V5560/V6060
## PARTS LIST

* New Parts
Parts without Parts No. are not supplied.
Les articles non mentionnes dans le Parts No. ne sont pas fournis.
Teile ohne Parts No. werden nicht geliefert

**No.4**

| Ref. No. 参照番号 | Address 位置 | New Parts 新 | Parts No. 部品番号 | Description 部品名／規格 | Destination 仕向 | Remarks 備考 |
|---|---|---|---|---|---|---|
| - | | | B60-1443-00 | INSTRUCTION MANUAL (FRENCH) | P | |
| - | | | B60-1444-00 | INSTRUCTION MANUAL (CHINESE) | M | |
| - | | | B60-1445-00 | INSTRUCTION MANUAL (GE,DU) | E | |
| - | | | B60-1446-00 | INSTRUCTION MANUAL (SPANISH) | MR | |
| - | | | B60-1593-00 | INSTRUCTION MANUAL (SPANISH) | E | |
| - | | | B60-1594-00 | INSTRUCTION MANUAL (FR,IT) | E | |
| ⚠ 620 | 1B | | E03-0115-05 | AC PLUG ADAPTER | M | |
| ⚠ 621 | 1D | | E30-2592-15 | AC POWER CORD | ME | |
| ⚠ 621 | 1D | | E30-2605-05 | AC POWER CORD | Y | |
| ⚠ 621 | 1D | | E30-2650-05 | AC POWER CORD | KPR | |
| ⚠ 621 | 1D | | E30-2721-05 | AC POWER CORD | T | |
| 630 | 1C | * | F20-1258-04 | INSULATING BOARD | T | |
| 631 | 2B | | F20-1284-05 | INSULATING BOARD (FRONT) | | |
| 632 | 2B | | F20-1297-05 | INSULATING SHEET (CENTER,REAR) | | |
| 633 | 2B | * | F20-1392-04 | INSULATING BOARD | | |
| 634 | 2D | | F20-1393-04 | INSULATING SHEET | YMTE | |
| - | | * | H10-5676-02 | POLYSTYRENE FOAMED FIXTURE (L) | KPYMER | S |
| - | | * | H10-5677-02 | POLYSTYRENE FOAMED FIXTURE (R) | KPYMER | S |
| - | | * | H10-5678-02 | POLYSTYRENE FOAMED FIXTURE (L) | T | S |
| - | | * | H10-5679-02 | POLYSTYRENE FOAMED FIXTURE (R) | T | S |
| - | | | H10-5680-02 | POLYSTYRENE FOAMED FIXTURE (L) | KPR | W |
| - | | | H10-5681-02 | POLYSTYRENE FOAMED FIXTURE (R) | KPR | W |
| - | | * | H11-0061-04 | POLYSTYRENE FOAMED BOARD | | |
| - | | * | H13-0147-14 | CARTON BOARD | KPYMER | |
| - | | * | H13-0160-04 | CARTON BOARD | T | |
| - | | | H25-0232-04 | PROTECTION BAG (235X350X0.03) | KPYMER | |
| - | | | H25-0361-04 | PROTECTION BAG | KPYMER | |
| - | | | H25-0651-04 | PROTECTION BAG (0232 PRINTED) | T | |
| - | | | H25-0666-04 | PROTECTION BAG (0361 PRINTED) | T | |
| - | | * | H50-0921-04 | ITEM CARTON CASE | KPYER | S |
| - | | * | H50-0922-04 | ITEM CARTON CASE | M | S |
| - | | * | H50-0923-04 | ITEM CARTON CASE | T | S |
| - | | * | H50-0985-04 | ITEM CARTON CASE | KPR | W |
| 638 | 3D | | J02-0366-15 | FOOT | KPYMR | |
| 639 | 3D | | J02-1040-05 | FOOT | TE | |
| 640 | 2D | | J19-3208-05 | UNIT HOLDER | | |
| 641 | 2C | | J19-3326-15 | UNIT HOLDER | | |
| 642 | 2C,2D | * | J19-3657-04 | UNIT HOLDER(USABLE J19-3609-04 | | |
| ⚠ 643 | 1B | * | J19-3645-05 | AM LOOP ANT.STAND | | |
| 648 | 1D | | J42-0083-05 | POWER CORD BUSHING | | |
| - | | | J61-0307-05 | WIRE BAND | | |
| 652 | 3B | | K29-5833-02 | KNOB (SURROUND) | | |
| 653 | 3A | | K29-5834-13 | KNOB (10KEY) | | |
| 654 | 2A,3A | | K29-5836-02 | KNOB (POWER,TUNING) | TE | |
| 654 | 2A,3A | | K29-5837-02 | KNOB (POWER,TUNING) | KPYMR | |
| 655 | 3A | | K29-5838-04 | KNOB (BASS,TREBLE) | | |
| 656 | 3A | | K29-5839-14 | KNOB (BARANCE) | | |
| 657 | 3A | | K29-5859-04 | KNOB ASSY (VOLIUME) | | |
| 658 | 3A | | K29-5866-04 | KNOB (INPUT SELECTOR) | | |
| ⚠ 660 | 2C | * | L07-0843-05 | POWER TRANSFORMER | P | |
| ⚠ 660 | 2C | * | L07-0844-05 | POWER TRANSFORMER | E | |
| ⚠ 660 | 2C | * | L07-0845-05 | POWER TRANSFORMER | T | |
| ⚠ 660 | 2C | * | L07-0846-05 | POWER TRANSFORMER | YM | |

L:Scandinavia K:USA P:Canada R:Mexico
Y:PX(Far East, Hawaii) T:England E:Europe G:Germany
Y:AAFES(Europe) X:Australia M:Other Areas

S:Singapore made
W:Malaysia made

4:KR-694
5:KR-V5560
6:KR-V6060

⚠ indicates safety critical components

* New Parts
Parts without Parts No. are not supplied.
Les articles non mentionnes dans le Parts No. ne sont pas fournis.
Teile ohne Parts No. werden nicht geliefert

**No.5**

| Ref. No. 参照番号 | Address 位置 | New Parts 新 | Parts No. 部品番号 | Description 部品名／規格 | Destination 仕向 | Remarks 備考 |
|---|---|---|---|---|---|---|
| ⚠ 660 | 2C | * | L07-0847-05 | POWER TRANSFORMER | KR | |
| A | | | N08-0126-35 | BINDING POST (EARTH) | YMTE | |
| A | | | N09-2909-05 | TAPTITE SCREW | KPR | |
| B | | | N09-0333-05 | TAPPING SCREW (3X12) | | |
| C | | | N09-2907-05 | SEMS (TAPTITE SCREW)(3X14) | | |
| D | | | N82-2608-46 | BINDIG HEAD TAPTITE SCREW | | |
| E | | | N89-3008-45 | BINDING HEAD TAPTITE SCREW | | |
| F | | | N89-3008-46 | BINDING HEAD TAPTITE SCREW | | |
| G | | | N89-3018-46 | BINDING HEAD TAPTITE SCREW | | |
| H | | | N29-0265-15 | PUSH RIVET | | |
| 665 | 1B | | T90-0175-05 | T TYPE ANTENNA | | |
| 666 | 1B | | T90-0195-05 | LOOP ANTENNA | | |
| 667 | 1B | | T90-0185-05 | ANTENNA ADAPTOR | TE | |
| **TUNER UNIT(X05-446X-XX) : Except E,T** | | | | | | |
| C1 ,2 | | | CK73FB1H103K | CHIP C 0.010UF K | | |
| C4 | | | CE04LW1A470M | ELECTRO 47UF 10WV | | |
| C5 | | | CK73FB1H103K | CHIP C 0.010UF K | | |
| C8 | | | CK73FB1H103K | CHIP C 0.010UF K | | |
| C10 | | | CK73FB1H122K | CHIP C 1200PF K | | |
| C11 | | | CE04LW1H4R7M | ELECTRO 4.7UF 50WV | | |
| C13 | | | CE04LW1H010M | ELECTRO 1.0UF 50WV | | |
| C14 | | | CE04LW1H2R2M | ELECTRO 2.2UF 50WV | | |
| C21 ,22 | | | CQ92FM1H163J | MYLAR 0.016UF J | YMX | |
| C21 ,22 | | | CQ92FM1H243J | MYLAR 0.024UF J | KPR | |
| C23 | | | CE04LW1H010M | ELECTRO 1.0UF 50WV | | |
| C24 | | | CE04LW1H3R3M | ELECTRO 3.3UF 50WV | | |
| C25 | | | CE04LW1V100M | ELECTRO 10UF 35WV | | |
| C27 | | | CK73FB1E473K | CHIP C 0.047UF K | | |
| C28 | | | CE04LW1V100M | ELECTRO 10UF 35WV | | |
| C31 | | | CE04LW1A470M | ELECTRO 47UF 10WV | | |
| C32 | | | CK73FB1H103K | CHIP C 0.010UF K | | |
| C33 | | | CC73FCH1H270J | CHIP C 27PF J | | |
| C34 | | | CC73FCH1H220J | CHIP C 22PF J | | |
| C35 -38 | | | CK73FB1H471K | CHIP C 470PF K | | |
| C39 | | | CE04LW1C470M | ELECTRO 47UF 16WV | | |
| C40 | | | CK73FB1H223K | CHIP C 0.022UF K | | |
| C41 | | | CE04LW1H010M | ELECTRO 1.0UF 50WV | | |
| C42 ,43 | | | CK73FB1H103K | CHIP C 0.010UF K | | |
| C50 | | | C91-0769-05 | CERAMIC 0.01UF K | | |
| C51 | | | CE04LW1H010M | ELECTRO 1.0UF 50WV | | |
| C52 | | | CE04LW1C470M | ELECTRO 47UF 16WV | | |
| C57 | | | CC73FSL1H220J | CHIP C 22PF J | | |
| C65 | | | CE04LW1H010M | ELECTRO 1.0UF 50WV | | |
| C66 | | | CK73FB1H102K | CHIP C 1000PF K | | |
| C71 | | | CE04LW1V100M | ELECTRO 10UF 35WV | | |
| C72 | | | CE04LW1C470M | ELECTRO 47UF 16WV | | |
| C103-106 | | | CE04LW1HR47M | ELECTRO 0.47UF 50WV | | |
| C107 | | | CK73FB1E473K | CHIP C 0.047UF K | | |
| C112 | | | CC73FSL1H101J | CHIP C 100PF J | | |
| C114 | | | CK73FB1H681K | CHIP C 680PF K | | |
| C115,116 | | | CC73FSL1H101J | CHIP C 100PF J | | |
| C121,122 | | | CE04LW1C470M | ELECTRO 47UF 16WV | | |
| C135,136 | | | CQ92FM1H682J | MYLAR 6800PF J | YM | |
| C182 | | | CC73FSL1H150J | CHIP C 15PF J | | |

L:Scandinavia K:USA P:Canada R:Mexico
Y:PX(Far East, Hawaii) T:England E:Europe G:Germany
Y:AAFES(Europe) X:Australia M:Other Areas

S:Singapore made
W:Malaysia made

4:KR-694
5:KR-V5560
6:KR-V6060

⚠ indicates safety critical components

# KR-694/V5560/V6060

## PARTS LIST

* New Parts
Parts without Parts No. are not supplied.
Les articles non mentionnes dans le Parts No. ne sont pas fournis.
Teile ohne Parts No. werden nicht geliefert.

**No.6**

| Ref. No. 参照番号 | Address 位置 | New Parts 新 | Parts No. 部品番号 | Description 部品名／規格 | Destination 仕向 | Remarks 備考 |
|---|---|---|---|---|---|---|
| J1 | | | E20-0476-05 | LOCK TERMINAL BOARD(4P) | | |
| J2 | | * | F10-0920-14 | SHIELDING PLATE | | |
| CF1 ,2 | | | L72-0531-05 | CERAMIC FILTER | | |
| CF3 | | | L72-0574-05 | CERAMIC FILTER | | |
| L7 | | | L30-0467-05 | AM IFT | | |
| L10 | | | L40-1091-17 | SMALL FIXED INDUCTOR(1UH) | | |
| L11 | | | L40-1021-14 | SMALL FIXED INDUCTOR(1.0MH,K) | | |
| L12 | | | L40-1091-17 | SMALL FIXED INDUCTOR(1UH) | | |
| L103 | | | L39-1309-05 | COMBINATION COIL | | |
| L106 | | | L40-1091-17 | SMALL FIXED INDUCTOR(1UH) | | |
| X1 | | | L77-1122-05 | CRYSTAL RESONATOR(7.2MHZ) | | |
| X2 | | | L78-0295-05 | RESONATOR (19KHZ) | | |
| ⚠ R11 | | | RS14KB3A820J | FL-PROOF RS 82 J 1W | | |
| R31 | | | RS14KB3D221J | FL-PROOF RS 220 J 2W | | |
| R42 | | | RD14NB2E101J | RD 100 J 1/4W | | |
| R111 | | | RD14NB2E470J | RD 47 J 1/4W | | |
| ⚠ R127,128 | | | RD14NB2E101J | RD 100 J 1/4W | | |
| W46 | | | R92-0670-05 | CHIP R 0 OHM | | |
| W48 | | | R92-0670-05 | CHIP R 0 OHM | | |
| S101 | | | S62-0034-05 | SLIDE SWITCH(CH,SPACE,EMPASIS) | YM | |
| D3 | | | HZS5.1N(B2) | ZENER DIODE | | |
| D3 | | | RD5.1ES(B2) | ZENER DIODE | | |
| D4 | | | HZS3.3N(B2) | ZENER DIODE | | |
| D4 | | | RD3.3ES(B2) | ZENER DIODE | | |
| D7 | | | MA110 | DIODE | | |
| D8 | | | HSS104 | DIODE | | |
| D8 | | | 1SS133 | DIODE | | |
| D11 | | | HZS8.2N(B2) | ZENER DIODE | | |
| D11 | | | RD8.2ES(B2) | ZENER DIODE | | |
| D111,112 | | | MA110 | DIODE | | |
| IC1 | | | LA1831-KEN | ANALOG IC | | |
| IC2 | | | LC7218 | IC(PLL SYNTHESIZER) | | |
| IC12 | | | NJM4565D | IC(OP AMP X2) | | |
| Q1 | | | 2SC2714(R,O) | TRANSISTOR | | |
| Q2 | | | 2SC1845(F,E) | TRANSISTOR | | |
| Q3 | | | 2SC1740S(Q,R) | TRANSISTOR | | |
| Q3 | | | 2SC2785(F,E) | TRANSISTOR | | |
| Q7 | | | 2SC2412K | TRANSISTOR | | |
| Q11 | | | 2SD863(E,F) | TRANSISTOR | | |
| Q102 | | | 2SA1037K | TRANSISTOR | | |
| Q104 | | | 2SA1037K | TRANSISTOR | | |
| Q107,108 | | | 2SC2412K | TRANSISTOR | YM | |
| Q109,110 | | | 2SC2412K | TRANSISTOR | | |
| Q111 | | | 2SA1037K | TRANSISTOR | | |
| DT1 | | | W02-1167-05 | FM FRONT-END ASSY | | |
| **TUNER UNIT(X05-447X-XX) : E,T type** | | | | | | |
| C1 ,2 | | | CK73FB1H103K | CHIP C 0.010UF K | | |
| C4 | | | CE04LW1C470M | ELECTRO 47UF 16WV | | |
| C5 | | | CK73FB1H223K | CHIP C 0.022UF K | | |
| C6 | | | CK73FB1E473K | CHIP C 0.047UF K | | |
| C7 | | | CE04LW1H3R3M | ELECTRO 3.3UF 50WV | | |

L:Scandinavia K:USA P:Canada R:Mexico
Y:PX(Far East, Hawaii) T:England E:Europe G:Germany
Y:AAFES(Europe) X:Australia M:Other Areas

S:Singapore made
W:Malaysia made

4:KR-694
5:KR-V5560
6:KR-V6060

⚠ indicates safety critical components.

* New Parts
Parts without Parts No. are not supplied.
Les articles non mentionnes dans le Parts No. ne sont pas fournis.
Teile ohne Parts No. werden nicht geliefert.

**No.7**

| Ref. No. 参照番号 | Address 位置 | New Parts 新 | Parts No. 部品番号 | Description 部品名／規格 | Destination 仕向 | Remarks 備考 |
|---|---|---|---|---|---|---|
| C8 | | | CK73FB1H682K | CHIP C 6800PF K | | |
| C9 | | | CK73FB1H103K | CHIP C 0.010UF K | | |
| C10 | | | CC73FSL1H330J | CHIP C 33PF J | | |
| C11 | | | CE04LW1V100M | ELECTRO 10UF 35WV | | |
| C12 | | | CE04LW1H010M | ELECTRO 1.0UF 50WV | | |
| C13 | | | CE04LW1HR33M | ELECTRO 0.33UF 50WV | | |
| C14 | | | CE04LW1H010M | ELECTRO 1.0UF 50WV | | |
| C15 | | | CK73FB1H103K | CHIP C 0.010UF K | | |
| C16 | | | C91-0769-05 | CERAMIC 0.01UF K | | |
| C17 | | | CK73FB1H223K | CHIP C 0.022UF K | | |
| C21 ,22 | | | CK73FB1H682K | CHIP C 6800PF K | | |
| C23 | | | CE04LW1V100M | ELECTRO 10UF 35WV | | |
| C25 | | | CE04LW1V100M | ELECTRO 10UF 35WV | | |
| C27 | | | CE04LW1V100M | ELECTRO 10UF 35WV | | |
| C28 | | | CK73FB1E473K | CHIP C 0.047UF K | | |
| C31 | | | CE04LW1A470M | ELECTRO 47UF 10WV | | |
| C32 | | | CK73FB1H103K | CHIP C 0.010UF K | | |
| C33 | | | CC73FCH1H270J | CHIP C 27PF J | | |
| C34 | | | CC73FCH1H220J | CHIP C 22PF J | | |
| C35 -38 | | | CK73FB1H471K | CHIP C 470PF K | | |
| C39 | | | CE04LW1C470M | ELECTRO 47UF 16WV | | |
| C40 | | | CQ92FM1H223J | MYLAR 0.022UF J | | |
| C41 | | | CE04HW1H2R2M | NP-ELEC 2.2UF 50WV | | |
| C42 ,43 | | | CK73FB1H103K | CHIP C 0.010UF K | | |
| C45 ,46 | | | CE04LW1V100M | ELECTRO 10UF 35WV | | |
| C47 ,48 | | | CE04LW1H0R1M | ELECTRO 0.1UF 50WV | | |
| C50 | | | C91-0769-05 | CERAMIC 0.01UF K | | |
| C51 | | | CE04LW1H010M | ELECTRO 1.0UF 50WV | | |
| C52 | | | CE04LW1C470M | ELECTRO 47UF 16WV | | |
| C56 | | | CC73FCH1H220J | CHIP C 22PF J | | |
| C58 ,59 | | | CK73FB1H472K | CHIP C 4700PF K | | |
| C65 | | | CE04LW1H010M | ELECTRO 1.0UF 50WV | | |
| C66 | | | C91-0769-05 | CERAMIC 0.01UF K | | |
| C72 | | | CE04LW1C470M | ELECTRO 47UF 16WV | | |
| C107 | | | CK73FB1E473K | CHIP C 0.047UF K | | |
| C121,122 | | | CE04LW1C470M | ELECTRO 47UF 16WV | | |
| C123 | | | CE04LW1H0R1M | ELECTRO 0.1UF 50WV | | |
| C172 | | | CC73FSL1H330J | CHIP C 33PF J | | |
| C173-175 | | | CK73FB1H102K | CHIP C 1000PF K | | |
| C182 | | | CC73FSL1H150J | CHIP C 15PF J | | |
| J1 | | | E20-0321-05 | LOCK TERMINAL BOARD | | |
| J2 | | * | F10-0921-14 | SHIELDING PLATE | | |
| CF1 ,2 | | | L72-0536-05 | CERAMIC FILTER | | |
| L1 ,2 | | | L40-1091-17 | SMALL FIXED INDUCTOR(1UH) | | |
| L3 | | | L30-0496-05 | FM IFT | | |
| L4 | | | L30-0497-05 | FM IFT | | |
| L5 | | | L79-0125-05 | LC FILTER | | |
| L7 | | | L30-0467-05 | AM IFT | | |
| L8 ,9 | | | L79-0790-05 | LC FILTER | | |
| L10 | | | L40-1091-17 | SMALL FIXED INDUCTOR(1UH) | | |
| L103 | | | L39-1309-05 | COMBINATION COIL | | |
| L106 | | | L40-1091-17 | SMALL FIXED INDUCTOR(1UH) | | |
| X1 | | | L77-1122-05 | CRYSTAL RESONATOR(7.2MHZ) | | |

L:Scandinavia K:USA P:Canada R:Mexico
Y:PX(Far East, Hawaii) T:England E:Europe G:Germany
Y:AAFES(Europe) X:Australia M:Other Areas

S:Singapore made
W:Malaysia made

4:KR-694
5:KR-V5560
6:KR-V6060

⚠ indicates safety critical components.

# KR-694/V5560/V6060
## PARTS LIST

× New Parts
Parts without Parts No. are not supplied.
Les articles non mentionnes dans le Parts No. ne sont pas fournis.
Teile ohne Parts No. werden nicht geliefert.

**No.8**

| Ref. No. 参照番号 | Address 位置 | New Parts 新 | Parts No. 部品番号 | Description 部品名／規格 | Destination 仕向 | Remarks 備考 |
|---|---|---|---|---|---|---|
| X2 | | | L78-0295-05 | RESONATOR (19KHZ) | | |
| R31 | | | RS14KB3D221J | FL-PROOF RS 220 J 2W | | |
| R42 | | | RD14NB2E101J | RD 100 J 1/4W | | |
| R111 | | | RD14NB2E470J | RD 47 J 1/4W | | |
| R127,128 | | | RD14NB2E101J | RD 100 J 1/4W | | |
| VR1 | | | R12-3686-05 | TRIMMING POT.(22K) | | |
| VR2 | | | R12-3685-05 | TRIMMING POT.(10K) | | |
| VR3 | | | R12-1619-05 | TRIMMING POT.(4.7K) | | |
| W100-103 | | | R92-0670-05 | CHIP R 0 OHM | | |
| W200-211 | | | R92-0679-05 | CHIP R 0 OHM | | |
| D3 | | | HZS5.1N(B2) | ZENER DIODE | | |
| D3 | | | RD5.1ES(B2) | ZENER DIODE | | |
| D4 | | | HZS3.3N(B2) | ZENER DIODE | | |
| D4 | | | RD3.3ES(B2) | ZENER DIODE | | |
| D5 | | | HSS104 | DIODE | | |
| D5 | | | 1SS133 | DIODE | | |
| D11 | | | HZS10N(B) | ZENER DIODE | | |
| D11 | | | RD10ES(B) | ZENER DIODE | | |
| D111,112 | | | HSS104 | DIODE | | |
| D111,112 | | | 1SS133 | DIODE | | |
| D117,118 | | | 1SS268 | DIODE | | |
| D121 | | | MA110 | DIODE | | |
| D125 | | | MA110 | DIODE | | |
| IC1 | | | LA1851N | IC(AM,FM TUNER) | | |
| IC2 | | | LC7218 | IC(PLL SYNTHESIZER) | | |
| IC3 | | | NJM4565D | IC(OP AMP X2) | | |
| IC4 | | | M5223P | IC(OP AMP X2) | | |
| Q1 | | | 2SC2714(R,O) | TRANSISTOR | | |
| Q2 | | | 2SC1845(F,E) | TRANSISTOR | | |
| Q3 ,4 | | | 2SC2412K | TRANSISTOR | | |
| Q5 | | | 2SA1037K | TRANSISTOR | | |
| Q7 ,8 | | | 2SC2412K | TRANSISTOR | | |
| Q9 | | | 2SA1037K | TRANSISTOR | | |
| Q10 | | | 2SC2412K | TRANSISTOR | | |
| Q11 | | | 2SD863(E,F) | TRANSISTOR | | |
| Q102 | | | 2SA1037K | TRANSISTOR | | |
| Q109,110 | | | 2SC2412K | TRANSISTOR | | |
| Q111 | | | 2SA1037K | TRANSISTOR | | |
| DT1 | | | W02-1166-15 | FM FRONT-END ASSY | | |
| **MAIN AMP UNIT(X07-277X-XX) : K,P,R type** | | | | | | |
| C1 ,2 | | | CC45FSL1H101J | CERAMIC 100PF J | | |
| C3 ,4 | | | CK45FF1H103Z | CERAMIC 0.010UF Z | | |
| C7 ,8 | | | CQ92FM1H104J | MYLAR 0.10UF J | | |
| C9 -12 | | | CK45FF1H103Z | CERAMIC 0.010UF Z | | |
| C13 ,14 | | | CQ92FM1H104J | MYLAR 0.10UF J | | |
| C17 ,18 | | | CK45FF1H103Z | CERAMIC 0.010UF Z | | |
| C21 | | | CE04LW0J221M | ELECTRO 220UF 6.3WV | | |
| C22 | | | CE04LW1V4R7M | ELECTRO 4.7UF 35WV | | |
| C31 ,32 | | | CK45FF1H103Z | CERAMIC 0.010UF Z | | |
| C33 ,34 | | | C90-3536-05 | ELECTRO 6800UF 71WV | | 6 |
| C33 ,34 | | * | C90-3538-05 | ELECTRO 6800UF 63WV | | 4 |
| C33 ,34 | | * | C90-3538-05 | ELECTRO 6800UF 63WV | | 5 |
| C35 | | | CE04LW1J100M | ELECTRO 10UF 63WV | | 4 |

L:Scandinavia K:USA P:Canada R:Mexico
Y:PX(Far East, Hawaii) T:England E:Europe G:Germany
Y:AAFES(Europe) X:Australia M:Other Areas

S:Singapore made
W:Malaysia made

4:KR-694
5:KR-V5560
6:KR-V6060

⚠ indicates safety critical components

**No.9**

| Ref. No. 参照番号 | Address 位置 | New Parts 新 | Parts No. 部品番号 | Description 部品名／規格 | Destination 仕向 | Remarks 備考 |
|---|---|---|---|---|---|---|
| C35 | | | CE04LW1J100M | ELECTRO 10UF 63WV | | 5 |
| C35 | | | CE04LW2A100M | ELECTRO 10UF 100WV | | 6 |
| C36 | | * | CE04LW1J331M | ELECTRO 330UF 63WV | | 4 |
| C36 | | * | CE04LW1J331M | ELECTRO 330UF 63WV | | 5 |
| C36 | | | CE04LW2A331M | ELECTRO 330UF 100WV | | 6 |
| C37 | | | CE04LW1V102M | ELECTRO 1000UF 35WV | | |
| C39 ,40 | | | CK45FB1H102K | CERAMIC 1000PF K | | |
| C41 -45 | | | CE04LW1C470M | ELECTRO 47UF 16WV | | |
| C46 | | | CK45FF1H103Z | CERAMIC 0.010UF Z | | |
| C47 ,48 | | | CK45FE2H103P | CERAMIC 0.010UF P | | 6 |
| C50 | | | CE04LW1J221M | ELECTRO 220UF 63WV | | |
| C51 | | | CE04LW1V100M | ELECTRO 10UF 35WV | | |
| ⚠ C59 | | | C91-1488-05 | MF 6800PF 250VAC | | |
| C60 | | | CK45FF1H103Z | CERAMIC 0.010UF Z | | |
| C61 | | | CE04EW1E331M | ELECTRO 330UF 25WV | | |
| C62 ,63 | | | CE04LW1A470M | ELECTRO 47UF 10WV | | |
| C65 | | | CE04LW1V4R7M | ELECTRO 4.7UF 35WV | | |
| C70 | | | CK45FF1H103Z | CERAMIC 0.010UF Z | | |
| C71 -74 | | | CK45FB1H102K | CERAMIC 1000PF K | | |
| C83 | | | CK45FF1H103Z | CERAMIC 0.010UF Z | | |
| C84 | | | CK45FB1H471K | CERAMIC 470PF K | | |
| C85 | | | CK45FB1H471K | CERAMIC 470PF K | | 6 |
| C90 | | | CE04LW1A470M | ELECTRO 47UF 10WV | | |
| C91 | | | CE04LW0J471M | ELECTRO 470UF 6.3WV | | |
| C92 ,93 | | | CK45FF1H103Z | CERAMIC 0.010UF Z | | |
| C95 ,96 | | | CE04LW1V100M | ELECTRO 10UF 35WV | | |
| C99 ,100 | | | CC45FSL1H470J | CERAMIC 47PF J | | |
| C101-103 | | | CK45FF1H103Z | CERAMIC 0.010UF Z | | |
| C104,105 | | | CC45FSL1H221J | CERAMIC 220PF J | | |
| C106 | | | CK45FF1H473Z | CERAMIC 0.047UF Z | | |
| ⚠ J3 | | | E03-0117-05 | AC OUTLET | | |
| J4 | | | E70-0047-05 | LOCK TERMINAL BOARD | | |
| J5 | | | E70-0046-05 | LOCK TERMINAL BOARD | | |
| J6 | | | E11-0127-05 | PHONE JACK (3P) | | |
| J7 | | | E63-0069-15 | PHONO JACK | | |
| J8 | | | E11-0188-05 | MINIATURE PHONE JACK(2P ｱｰｽ) | | |
| ⚠ F1 | | | F05-6029-05 | FUSE (UL) (125V 6A) | | |
| ⚠ F6 | | | F04-1026-05 | FUSE (UL) (250V 1A) | | |
| CN5 ,6 | | | J13-0075-05 | FUSE CLIP | | |
| CN11,12 | | | J13-0075-05 | FUSE CLIP | | |
| J2 | | | J11-0098-05 | WIRE CLAMPER | | |
| L1 -4 | | | L39-0065-05 | PHASE COMPENSATION COIL | | |
| ⚠ T1 | | | L07-0864-05 | POWER TRANSFORMER | | |
| J | | | N35-3008-46 | BINDING HEAD MACHINE SCREW | | |
| CP1 ,2 | | | R90-0840-05 | RD 0.22 5W | | |
| CP3 ,4 | | | R90-0840-05 | RD 0.22 5W | | 4 |
| CP3 ,4 | | | R90-0840-05 | RD 0.22 5W | | 5 |
| CP3 ,4 | | | R90-0888-05 | MULTIPLE RESISTOR | | 6 |
| R5 -8 | | | RD14NB2E220J | RD 22 J 1/4W | | |
| R9 ,10 | | | RS14KB3D4R7J | FL-PROOF RS 4.7 J 2W | | |
| R11 ,12 | | | RD14NB2E100J | RD 10 J 1/4W | | |
| R13 ,14 | | | RD14NB2E332J | RD 3.3K J 1/4W | | |

L:Scandinavia K:USA P:Canada R:Mexico
Y:PX(Far East, Hawaii) T:England E:Europe G:Germany
Y:AAFES(Europe) X:Australia M:Other Areas

S:Singapore made
W:Malaysia made

4:KR-694
5:KR-V5560
6:KR-V6060

⚠ indicates safety critical components

# KR-694/V5560/V6060 PARTS LIST

* New Parts
Parts without Parts No. are not supplied.
Les articles non mentionnes dans le Parts No. ne sont pas fournis.
Telle ohne Parts No. werden nicht geliefert.

## No.10

| Ref. No. 参照番号 | Address 位置 | New Parts 新 | Parts No. 部品番号 | Description 部品名／規格 | Destination 仕向 | Remarks 備考 |
|---|---|---|---|---|---|---|
| R25 -28 | | | RD14NB2E220J | RD 22 J 1/4W | | |
| R29 ,30 | | | RS14KB3D4R7J | FL-PROOF RS 4.7 J 2W | | |
| R31 ,32 | | | RD14NB2E100J | RD 10 J 1/4W | | |
| R33 ,34 | | | RD14NB2E332J | RD 3.3K J 1/4W | | |
| R55 ,56 | | | RS14KB3A561J | FL-PROOF RS 560 J 1W | | |
| ⚠ R61 | | | RD14NB2E100J | RD 10 J 1/4W | | |
| ⚠ R62 | | | RD14NB2E470J | RD 47 J 1/4W | | |
| ⚠ R64 ,65 | | | RS14KB3D151J | FL-PROOF RS 150 J 2W | | |
| R71 | | | RD14NB2E101J | RD 100 J 1/4W | | |
| ⚠ R76 | | | RS14KB3D271J | FL-PROOF RS 270 J 2W | | |
| ⚠ R78 ,79 | | | RS14KB3D271J | FL-PROOF RS 270 J 2W | | |
| ⚠ R80 | | | RD14NB2E180J | RD 18 J 1/4W | | |
| R81 | | | RD14NB2E682J | RD 6.8K J 1/4W | | |
| ⚠ R91 ,92 | | | RD14NB2E470J | RD 47 J 1/4W | | |
| ⚠ R119 | | | R92-1769-05 | CARBON 3.3M J 1/2W | | |
| ⚠ R128 | | | RD14NB2E1R5J | RD 1.5 J 1/4W | | |
| ⚠ R170,171 | | | RS14KB3A391J | FL-PROOF RS 390 J 1W | | |
| VR1 -4 | | | R12-1617-05 | TRIMMING POT.(2.2K) | | |
| K1 ,2 | | | S51-2078-05 | MAGNETIC RELAY | | 6 |
| K1 ,2 | | | S51-2092-05 | MAGNETIC RELAY | | 6 |
| K1 ,2 | | | S76-0005-05 | MAGNETIC RELAY | | 5 |
| K1 ,2 | | | S76-0005-05 | MAGNETIC RELAY | | 4 |
| K3 | | | S76-0005-05 | MAGNETIC RELAY | | |
| K4 | | | S76-0016-05 | MAGNETIC RELAY | | 6 |
| K4 | | | S76-0017-05 | MAGNETIC RELAY | | 6 |
| ⚠ K5 | | | S76-0009-05 | MAGNETIC RELAY | | |
| S1 | | | S31-2132-05 | SLIDE SWITCH | | 6 |
| D1 -5 | | | HSS104A | DIODE | | |
| D1 -5 | | | 1SS131 | DIODE | | |
| D6 | | | HZS5.1N(B2) | ZENER DIODE | | |
| D6 | | | RD5.1ES(B2) | ZENER DIODE | | |
| ⚠ D7 | | | D5SBA20F03 | DIODE | | |
| ⚠ D7 | | | RBV-602LFA | DIODE | | |
| D8 | | | D5SBA20F03 | DIODE | | 6 |
| D8 | | | RBV-602LFA | DIODE | | 6 |
| ⚠ D9 -12 | | | S5688B | DIODE | | |
| ⚠ D9 -12 | | | 1SR139-100 | DIODE | | |
| D13 | | | HZS6.2N(B2) | ZENER DIODE | | |
| D13 | | | RD6.2ES(B2) | ZENER DIODE | | |
| D14 | | | HZS8.2N(B2) | ZENER DIODE | | |
| D14 | | | RD8.2ES(B2) | ZENER DIODE | | |
| D15 | | | HZS2.7N(B2) | ZENER DIODE | | |
| D15 | | | RD2.7ES(B2) | ZENER DIODE | | |
| ⚠ D16 ,17 | | | S5688B | DIODE | | |
| ⚠ D16 ,17 | | | 1SR139-100 | DIODE | | |
| D18 ,19 | | | HZS16N(B2) | ZENER DIODE | | |
| D18 ,19 | | | RD16ES(B2) | ZENER DIODE | | |
| D21 -23 | | | HSS104 | DIODE | | |
| D21 -23 | | | 1SS133 | DIODE | | |
| D24 | | | HSS104 | DIODE | | 6 |
| D24 | | | 1SS133 | DIODE | | 6 |
| D25 -27 | | | HSS104 | DIODE | | |
| D25 -27 | | | 1SS133 | DIODE | | |
| ⚠ D28 ,29 | | | HSS104A | DIODE | | |

L:Scandinavia K:USA P:Canada R:Mexico
Y:PX(Far East, Hawaii) T:England E:Europe G:Germany
Y:AAFES(Europe) X:Australia M:Other Areas

S:Singapore made
W:Malaysia made

4:KR-694
5:KR-V5560
6:KR-V6060

⚠ indicates safety critical components.

* New Parts
Parts without Parts No. are not supplied.
Les articles non mentionnes dans le Parts No. ne sont pas fournis.
Telle ohne Parts No. werden nicht geliefert.

## No.11

| Ref. No. 参照番号 | Address 位置 | New Parts 新 | Parts No. 部品番号 | Description 部品名／規格 | Destination 仕向 | Remarks 備考 |
|---|---|---|---|---|---|---|
| ⚠ D28 ,29 | | | 1SS131 | DIODE | | |
| ⚠ D30 -33 | | | S5688B | DIODE | | |
| ⚠ D30 -33 | | | 1SR139-100 | DIODE | | |
| D34 | | | HZS6.2N(B2) | ZENER DIODE | | |
| D34 | | | RD6.2ES(B2) | ZENER DIODE | | |
| D35 | | | HSS104 | DIODE | | |
| D35 | | | 1SS133 | DIODE | | |
| D37 -40 | | | HSS104 | DIODE | | |
| D37 -40 | | | 1SS133 | DIODE | | |
| D41 -44 | | | HSS104A | DIODE | | |
| D41 -44 | | | 1SS131 | DIODE | | |
| D45 -52 | | | HZS13N(B2) | ZENER DIODE | | |
| D45 -52 | | | RD13ES(B2) | ZENER DIODE | | |
| D53 -56 | | | HZS5.1N(B2) | ZENER DIODE | | |
| D53 -56 | | | RD5.1ES(B2) | ZENER DIODE | | |
| D58 ,59 | | | HSS104 | DIODE | | |
| D58 ,59 | | | 1SS133 | DIODE | | |
| D60 ,61 | | | HZS5.1N(B2) | ZENER DIODE | | |
| D60 ,61 | | | RD5.1ES(B2) | ZENER DIODE | | |
| D62 ,63 | | | HSS104 | DIODE | | |
| D62 ,63 | | | 1SS133 | DIODE | | |
| IC1 | | | NJM2279D | IC(VIDEO IC) | | |
| Q1 -6 | | | 2SC1845(F,E) | TRANSISTOR | | |
| Q7 | | | 2SA992(F,E) | TRANSISTOR | | |
| ⚠ Q8 | | | 2SA1534A(R,S) | TRANSISTOR | | |
| ⚠ Q9 ,10 | | | 2SD2012 | TRANSISTOR | | |
| ⚠ Q9 ,10 | | | 2SD2061 | TRANSISTOR | | |
| ⚠ Q9 ,10 | | | 2SD2374 | TRANSISTOR | | |
| Q11 | | | 2SC1740S(Q,R) | TRANSISTOR | | |
| Q11 | | | 2SC2785(F,E) | TRANSISTOR | | |
| Q12 | | | 2SA1175(F,E) | TRANSISTOR | | |
| Q12 | | | 2SA933S(Q,R) | TRANSISTOR | | |
| Q13 | | | 2SC1740S(Q,R) | TRANSISTOR | | |
| Q13 | | | 2SC2785(F,E) | TRANSISTOR | | |
| Q14 | | | 2SA1175(F,E) | TRANSISTOR | | |
| Q14 | | | 2SA933S(Q,R) | TRANSISTOR | | |
| Q21 -23 | | | 2SC1740S(Q,R) | TRANSISTOR | | |
| Q21 -23 | | | 2SC2785(F,E) | TRANSISTOR | | |
| Q24 | | | 2SC1740S(Q,R) | TRANSISTOR | | 6 |
| Q24 | | | 2SC2785(F,E) | TRANSISTOR | | 6 |
| ⚠ Q25 | | | 2SC3940A(R,S) | TRANSISTOR | | |
| Q26 | | | 2SC2003(L,K) | TRANSISTOR | | |
| Q31 | | | 2SA1175(F,E) | TRANSISTOR | | 6 |
| Q31 | | | 2SA933S(Q,R) | TRANSISTOR | | 6 |
| Q32 | | | 2SC1740S(Q,R) | TRANSISTOR | | 6 |
| Q32 | | | 2SC2785(F,E) | TRANSISTOR | | 6 |
| Q33 | | | 2SA1175(F,E) | TRANSISTOR | | 6 |
| Q33 | | | 2SA933S(Q,R) | TRANSISTOR | | 6 |
| Q34 | | | 2SC1740S(Q,R) | TRANSISTOR | | 6 |
| Q34 | | | 2SC2785(F,E) | TRANSISTOR | | 6 |
| Q35 ,36 | | | 2SC1845(F,E) | TRANSISTOR | | 6 |
| Q37 ,38 | | | 2SA992(F,E) | TRANSISTOR | | 6 |
| Q39 | | | 2SA1175(F,E) | TRANSISTOR | | |
| Q39 | | | 2SA933S(Q,R) | TRANSISTOR | | |
| Q40 | | | 2SC1740S(Q,R) | TRANSISTOR | | |

L:Scandinavia K:USA P:Canada R:Mexico
Y:PX(Far East, Hawaii) T:England E:Europe G:Germany
Y:AAFES(Europe) X:Australia M:Other Areas

S:Singapore made
W:Malaysia made

4:KR-694
5:KR-V5560
6:KR-V6060

⚠ indicates safety critical components.

# KR-694/V5560/V6060
## PARTS LIST

* New Parts
Parts without Parts No. are not supplied.
Les articles non mentionnes dans le Parts No. ne sont pas fournis.
Teile ohne Parts No. werden nicht geliefert.

**No.12**

| Ref. No. 参照番号 | Address 位置 | New Parts 新 | Parts No. 部品番号 | Description 部品名／規格 | Destination 仕向 | Remarks 備考 |
|---|---|---|---|---|---|---|
| Q40 | | | 2SC2785(F,E) | TRANSISTOR | | |
| Q41 ,42 | | | 2SC1845(F,E) | TRANSISTOR | | |
| Q43 ,44 | | | 2SA992(F,E) | TRANSISTOR | | |
| Q101,102 | | | 2SD2222BT | TRANSISTOR | | 6 |
| Q101,102 | | | 2SD2255BT | TRANSISTOR | | 4 |
| Q101,102 | | | 2SD2255BT | TRANSISTOR | | 5 |
| Q103,104 | | | 2SB1470BT | TRANSISTOR | | 6 |
| Q103,104 | | | 2SB1493BT | TRANSISTOR | | 4 |
| Q103,104 | | | 2SB1493BT | TRANSISTOR | | 5 |
| Q105,106 | | | 2SC4137F19(V,W) | TRANSISTOR | | |
| Q107,108 | | | 2SD2255BT | TRANSISTOR | | |
| ⚠ Q109,110 | | | 2SB1493BT | TRANSISTOR | | |
| ⚠ Q111,112 | | | 2SC4137F19(V,W) | TRANSISTOR | | |
| **MAIN AMP UNIT(X07-278X-XX) : Y,M,X,E,T type** | | | | | | |
| C1 ,2 | | | CC45FSL1H101J | CERAMIC 100PF J | | |
| C3 ,4 | | | CK45FF1H103Z | CERAMIC 0.010UF Z | | |
| C5 -8 | | | CF92FV1H224J | MF 0.22UF J | E | |
| C7 ,8 | | | CQ92FM1H104J | MYLAR 0.10UF J | YMTX | |
| C9 -12 | | | CK45FF1H103Z | CERAMIC 0.010UF Z | | |
| C13 -16 | | | CF92FV1H224J | MF 0.22UF J | E | |
| C13 ,14 | | | CQ92FM1H104J | MYLAR 0.10UF J | YMTX | |
| C17 ,18 | | | CK45FF1H103Z | CERAMIC 0.010UF Z | | |
| C19 ,20 | | | CC45FSL1H561J | CERAMIC 560PF J | E | |
| C21 | | | CE04LW0J221M | ELECTRO 220UF 6.3WV | | |
| C22 | | | CE04LW1V4R7M | ELECTRO 4.7UF 35WV | | |
| C31 ,32 | | | CK45FF1H103Z | CERAMIC 0.010UF Z | | |
| C33 ,34 | | | C90-3536-05 | ELECTRO 6800UF 71WV | | 6 |
| C33 ,34 | | * | C90-3538-05 | ELECTRO 6800UF 63WV | | 4 |
| C33 ,34 | | * | C90-3538-05 | ELECTRO 6800UF 63WV | | 5 |
| C35 | | | CE04LW1J100M | ELECTRO 10UF 63WV | | 4 |
| C35 | | | CE04LW1J100M | ELECTRO 10UF 63WV | | 5 |
| C35 | | | CE04LW2A100M | ELECTRO 10UF 100WV | | 6 |
| C36 | | * | CE04LW1J331M | ELECTRO 330UF 63WV | | 4 |
| C36 | | * | CE04LW1J331M | ELECTRO 330UF 63WV | | 5 |
| C36 | | | CE04LW2A331M | ELECTRO 330UF 100WV | | 6 |
| C37 | | | CE04LW1V102M | ELECTRO 1000UF 35WV | | |
| C39 ,40 | | | CK45FB1H102K | CERAMIC 1000PF K | | |
| C41 -45 | | | CE04LW1C470M | ELECTRO 47UF 16WV | | |
| C46 | | | CK45FF1H103Z | CERAMIC 0.010UF Z | | |
| C47 ,48 | | | CK45FF2H103P | CERAMIC 0.010UF P | | 6 |
| C49 | | | CK45FF1H103Z | CERAMIC 0.010UF Z | E | |
| C50 | | | CE04LW1J221M | ELECTRO 220UF 63WV | | |
| C51 | | | CE04LW1V100M | ELECTRO 10UF 35WV | | |
| C52 | | | CK45FF1H103Z | CERAMIC 0.010UF Z | E | |
| ⚠ C59 | | | C91-1488-05 | MF 6800PF 250VAC | | |
| C60 | | | CK45FF1H103Z | CERAMIC 0.010UF Z | | |
| C61 | | | CE04EW1E331M | ELECTRO 330UF 25WV | | |
| C62 ,63 | | | CE04LW1A470M | ELECTRO 47UF 10WV | | |
| C65 | | | CE04LW1V4R7M | ELECTRO 4.7UF 35WV | | |
| C70 | | | CK45FF1H103Z | CERAMIC 0.010UF Z | | |
| C71 -74 | | | CK45FB1H102K | CERAMIC 1000PF K | | |
| C75 -79 | | | CK45FF1H472Z | CERAMIC 4700PF Z | E | |
| C81 | | | CK45FF1H472Z | CERAMIC 4700PF Z | E | |
| C83 | | | CK45FF1H103Z | CERAMIC 0.010UF Z | | |

L:Scandinavia K:USA P:Canada R:Mexico
Y:PX(Far East, Hawaii) T:England E:Europe G:Germany
Y:AAFES(Europe) X:Australia M:Other Areas

S:Singapore made
W:Malaysia made

4:KR-694
5:KR-V5560
6:KR-V6060

⚠ indicates safety critical components.

* New Parts
Parts without Parts No. are not supplied.
Les articles non mentionnes dans le Parts No. ne sont pas fournis.
Teile ohne Parts No. werden nicht geliefert.

**No.13**

| Ref. No. 参照番号 | Address 位置 | New Parts 新 | Parts No. 部品番号 | Description 部品名／規格 | Destination 仕向 | Remarks 備考 |
|---|---|---|---|---|---|---|
| C84 | | | CK45FB1H471K | CERAMIC 470PF K | | |
| C85 | | | CK45FB1H471K | CERAMIC 470PF K | | 6 |
| C90 | | | CE04LW1A470M | ELECTRO 47UF 10WV | | |
| C91 | | | CE04LW0J471M | ELECTRO 470UF 6.3WV | | |
| C92 ,93 | | | CK45FF1H103Z | CERAMIC 0.010UF Z | | |
| C95 ,96 | | | CE04LW1V100M | ELECTRO 10UF 35WV | | |
| C99 ,100 | | | CC45FSL1H470J | CERAMIC 47PF J | | |
| C101-103 | | | CK45FF1H103Z | CERAMIC 0.010UF Z | | |
| C104,105 | | | CC45FSL1H221J | CERAMIC 220PF J | | |
| C106 | | | CK45FF1H473Z | CERAMIC 0.047UF Z | | |
| ⚠ J3 | | | E03-0117-05 | AC OUTLET | Y | |
| J4 | | | E70-0047-05 | LOCK TERMINAL BOARD | | |
| J5 | | | E70-0046-05 | LOCK TERMINAL BOARD | | |
| J6 | | | E11-0127-05 | PHONE JACK | | 5 |
| J6 | | | E11-0127-05 | PHONE JACK | | 4 |
| J6 | | | E11-0190-05 | PHONE JACK | | 6 |
| J7 | | | E63-0069-15 | PHONO JACK | | |
| J8 | | | E11-0188-05 | MINIATURE PHONE JACK(2P) | | |
| ⚠ J11 ,12 | | | E03-0108-05 | AC OUTLET | ME | |
| ⚠ J11 ,12 | | | E03-0109-05 | AC OUTLET | T | |
| ⚠ F1 | | | F05-3121-05 | FUSE (SEMKO) (250V T3.15AL) | TEX | |
| ⚠ F1 ,2 | | | F05-3121-05 | FUSE (SEMKO) (250V T3.15AL) | YM | |
| ⚠ F3 | | | F05-2525-05 | FUSE (SEMKO) (250V T2.5AL) | MTE | |
| ⚠ F6 | | | F06-1022-05 | FUSE (SEMKO) (250V T1AL) | | |
| CN5 ,6 | | | J13-0075-05 | FUSE CLIP | | |
| CN7 ,8 | | | J13-0075-05 | FUSE CLIP | YM | |
| CN9 ,10 | | | J13-0075-05 | FUSE CLIP | MTE | |
| CN11,12 | | | J13-0075-05 | FUSE CLIP | | |
| J2 | | | J11-0098-05 | WIRE CLAMPER | | |
| L1 -4 | | | L39-0085-05 | PHASE COMPENSATION COIL | | |
| ⚠ T1 | | | L07-0865-05 | POWER TRANSFORMER | YM | |
| ⚠ T1 | | | L07-0866-05 | POWER TRANSFORMER | TX | |
| ⚠ T1 | | | L07-0867-05 | POWER TRANSFORMER | E | |
| J | | | N35-3008-46 | BINDING HEAD MACHINE SCREW | | |
| CP1 ,2 | | | R90-0840-05 | RD 0.22 5W | | |
| CP3 ,4 | | | R90-0840-05 | RD 0.22 5W | | 4 |
| CP3 ,4 | | | R90-0840-05 | RD 0.22 5W | | 5 |
| CP3 ,4 | | | R90-0868-05 | MULTIPLE RESISTOR | | 6 |
| R5 -8 | | | RD14NB2E220J | RD 22 J 1/4W | | |
| R9 ,10 | | | RS14KB3D4R7J | FL-PROOF RS 4.7 J 2W | | |
| R11 ,12 | | | RD14NB2E100J | RD 10 J 1/4W | | |
| R13 ,14 | | | RD14NB2E332J | RD 3.3K J 1/4W | | |
| R15 ,16 | | * | RD14NB2C112J | RD 1.1K J 1/6W | | 5 |
| R15 ,16 | | * | RD14NB2C112J | RD 1.1K J 1/6W | | 4 |
| R25 -28 | | | RD14NB2E220J | RD 22 J 1/4W | | |
| R29 ,30 | | | RS14KB3D4R7J | FL-PROOF RS 4.7 J 2W | | |
| R31 ,32 | | | RD14NB2E100J | RD 10 J 1/4W | | |
| R33 ,34 | | | RD14NB2E332J | RD 3.3K J 1/4W | | |
| R35 ,36 | | * | RD14NB2C112J | RD 1.1K J 1/6W | | 5 |
| R35 ,36 | | * | RD14NB2C112J | RD 1.1K J 1/6W | | 4 |
| R55 ,56 | | | RS14KB3A561J | FL-PROOF RS 560 J 1W | | |
| R61 | | | RD14NB2E100J | RD 10 J 1/4W | | |
| R62 | | | RD14NB2E470J | RD 47 J 1/4W | | |
| R64 ,65 | | | RS14KB3D151J | FL-PROOF RS 150 J 2W | | |

L:Scandinavia K:USA P:Canada R:Mexico
Y:PX(Far East, Hawaii) T:England E:Europe G:Germany
Y:AAFES(Europe) X:Australia M:Other Areas

S:Singapore made
W:Malaysia made

4:KR-694
5:KR-V5560
6:KR-V6060

⚠ indicates safety critical components

# KR-694/V5560/V6060 PARTS LIST

* New Parts
Parts without Parts No. are not supplied.
Les articles non mentionnes dans le Parts No. ne sont pas fournis.
Teile ohne Parts No. werden nicht geliefert.

## No.14

| Ref. No. 参照番号 | Address 位置 | New Parts 新 | Parts No. 部品番号 | Description 部品名／規格 | Destination 仕向 | Remarks 備考 |
|---|---|---|---|---|---|---|
| R71 | | | RD14NB2E101J | RD 100 J 1/4W | | |
| R76 | | | RS14KB3D271J | FL-PROOF RS 270 J 2W | | |
| R77 | | | RS14KB3D271J | FL-PROOF RS 270 J 2W | E | |
| R78 ,79 | | | RS14KB3D271J | FL-PROOF RS 270 J 2W | | |
| R80 | | | RD14NB2E180J | RD 18 J 1/4W | | |
| R81 | | | RD14NB2E682J | RD 6.8K J 1/4W | | |
| R91 ,92 | | | RD14NB2E470J | RD 47 J 1/4W | | |
| R128 | | | RD14NB2E1R5J | RD 1.5 J 1/4W | | |
| R170,171 | | | RS14KB3A391J | FL-PROOF RS 390 J 1W | | |
| VR1 -4 | | | R12-1617-05 | TRIMMING POT.(2.2K) | | |
| K1 ,2 | | | S51-2078-05 | MAGNETIC RELAY | | 6 |
| K1 ,2 | | | S51-2092-05 | MAGNETIC RELAY | | 6 |
| K1 ,2 | | | S76-0005-05 | MAGNETIC RELAY | | 5 |
| K1 ,2 | | | S76-0005-05 | MAGNETIC RELAY | | 4 |
| K3 | | | S76-0005-05 | MAGNETIC RELAY | | |
| K4 | | | S76-0016-05 | MAGNETIC RELAY | | 6 |
| K4 | | | S76-0017-05 | MAGNETIC RELAY | | 6 |
| ⚠ K5 | | | S76-0009-05 | MAGNETIC RELAY | | |
| S1 | | | S31-2132-05 | SLIDE SWITCH | | 6 |
| ⚠ S2 | | | S31-3010-05 | SLIDE SWITCH | YM | |
| D1 -5 | | | HSS104A | DIODE | | |
| D1 -5 | | | 1SS131 | DIODE | | |
| D6 | | | HZS5.1N(B2) | ZENER DIODE | | |
| D6 | | | RD5.1ES(B2) | ZENER DIODE | | |
| D7 | | | D5SBA20F03 | DIODE | | |
| D7 | | | RBV-602LFA | DIODE | | |
| D8 | | | D5SBA20F03 | DIODE | | 6 |
| D8 | | | RBV-602LFA | DIODE | | 6 |
| D9 -12 | | | S5688B | DIODE | | |
| D9 -12 | | | 1SR139-100 | DIODE | | |
| D13 | | | HZS6.2N(B2) | ZENER DIODE | | |
| D13 | | | RD6.2ES(B2) | ZENER DIODE | | |
| D14 | | | HZS8.2N(B2) | ZENER DIODE | | |
| D14 | | | RD8.2ES(B2) | ZENER DIODE | | |
| D15 | | | HZS2.7N(B2) | ZENER DIODE | | |
| D15 | | | RD2.7ES(B2) | ZENER DIODE | | |
| D16 ,17 | | | S5688B | DIODE | | |
| D16 ,17 | | | 1SR139-100 | DIODE | | |
| D18 ,19 | | | HZS16N(B2) | ZENER DIODE | | |
| D18 ,19 | | | RD16ES(B2) | ZENER DIODE | | |
| D21 -23 | | | HSS104 | DIODE | | |
| D21 -23 | | | 1SS133 | DIODE | | |
| D24 | | | HSS104 | DIODE | | 6 |
| D24 | | | 1SS133 | DIODE | | 6 |
| D25 -27 | | | HSS104 | DIODE | | |
| D25 -27 | | | 1SS133 | DIODE | | |
| D28 ,29 | | | HSS104A | DIODE | | |
| D28 ,29 | | | 1SS131 | DIODE | | |
| D30 -33 | | | S5688B | DIODE | | |
| D30 -33 | | | 1SR139-100 | DIODE | | |
| D34 | | | HZS6.2N(B2) | ZENER DIODE | | |
| D34 | | | RD6.2ES(B2) | ZENER DIODE | | |
| D35 | | | HSS104 | DIODE | | |
| D35 | | | 1SS133 | DIODE | | |
| D37 -40 | | | HSS104 | DIODE | | |

L:Scandinavia K:USA P:Canada R:Mexico
Y:PX(Far East, Hawaii) T:England E:Europe G:Germany
Y:AAFES(Europe) X:Australia M:Other Areas

S:Singapore made
W:Malaysia made

4:KR-694
5:KR-V5560
6:KR-V6060

⚠ indicates safety critical components

* New Parts
Parts without Parts No. are not supplied.
Les articles non mentionnes dans le Parts No. ne sont pas fournis.
Teile ohne Parts No. werden nicht geliefert.

## No.15

| Ref. No. 参照番号 | Address 位置 | New Parts 新 | Parts No. 部品番号 | Description 部品名／規格 | Destination 仕向 | Remarks 備考 |
|---|---|---|---|---|---|---|
| D37 -40 | | | 1SS133 | DIODE | | |
| D41 -44 | | | HSS104A | DIODE | | |
| D41 -44 | | | 1SS131 | DIODE | | |
| D45 -52 | | | HZS13N(B2) | ZENER DIODE | | |
| D45 -52 | | | RD13ES(B2) | ZENER DIODE | | |
| D53 -56 | | | HZS5.1N(B2) | ZENER DIODE | | |
| D53 -56 | | | RD5.1ES(B2) | ZENER DIODE | | |
| D58 ,59 | | | HSS104 | DIODE | | |
| D58 ,59 | | | 1SS133 | DIODE | | |
| D60 ,61 | | | HZS5.1N(B2) | ZENER DIODE | | |
| D60 ,61 | | | RD5.1ES(B2) | ZENER DIODE | | |
| D62 ,63 | | | HSS104 | DIODE | | |
| D62 ,63 | | | 1SS133 | DIODE | | |
| IC1 | | | NJM2279D | IC(VIDEO IC) | | |
| Q1 -6 | | | 2SC1845(F,E) | TRANSISTOR | | |
| Q7 | | | 2SA992(F,E) | TRANSISTOR | | |
| Q8 | | | 2SA1534A(R,S) | TRANSISTOR | | |
| Q9 ,10 | | | 2SD2012 | TRANSISTOR | | |
| Q9 ,10 | | | 2SD2061 | TRANSISTOR | | |
| Q9 ,10 | | | 2SD2374 | TRANSISTOR | | |
| Q11 | | | 2SC1740S(Q,R) | TRANSISTOR | | |
| Q11 | | | 2SC2785(F,E) | TRANSISTOR | | |
| Q12 | | | 2SA1175(F,E) | TRANSISTOR | | |
| Q12 | | | 2SA933S(Q,R) | TRANSISTOR | | |
| Q13 | | | 2SC1740S(Q,R) | TRANSISTOR | | |
| Q13 | | | 2SC2785(F,E) | TRANSISTOR | | |
| Q14 | | | 2SA1175(F,E) | TRANSISTOR | | |
| Q14 | | | 2SA933S(Q,R) | TRANSISTOR | | |
| Q21 -23 | | | 2SC1740S(Q,R) | TRANSISTOR | | |
| Q21 -23 | | | 2SC2785(F,E) | TRANSISTOR | | |
| Q24 | | | 2SC1740S(Q,R) | TRANSISTOR | | 6 |
| Q24 | | | 2SC2785(F,E) | TRANSISTOR | | 6 |
| Q25 | | | 2SC3940A(R,S) | TRANSISTOR | | |
| Q26 | | | 2SC2003(L,K) | TRANSISTOR | | |
| Q31 | | | 2SA1175(F,E) | TRANSISTOR | | 6 |
| Q31 | | | 2SA933S(Q,R) | TRANSISTOR | | 6 |
| Q32 | | | 2SC1740S(Q,R) | TRANSISTOR | | 6 |
| Q32 | | | 2SC2785(F,E) | TRANSISTOR | | 6 |
| Q33 | | | 2SA1175(F,E) | TRANSISTOR | | 6 |
| Q33 | | | 2SA933S(Q,R) | TRANSISTOR | | 6 |
| Q34 | | | 2SC1740S(Q,R) | TRANSISTOR | | 6 |
| Q34 | | | 2SC2785(F,E) | TRANSISTOR | | 6 |
| Q35 ,36 | | | 2SC1845(F,E) | TRANSISTOR | | 6 |
| Q37 ,38 | | | 2SA992(F,E) | TRANSISTOR | | 6 |
| Q39 | | | 2SA1175(F,E) | TRANSISTOR | | |
| Q39 | | | 2SA933S(Q,R) | TRANSISTOR | | |
| Q40 | | | 2SC1740S(Q,R) | TRANSISTOR | | |
| Q40 | | | 2SC2785(F,E) | TRANSISTOR | | |
| Q41 ,42 | | | 2SC1845(F,E) | TRANSISTOR | | |
| Q43 ,44 | | | 2SA992(F,E) | TRANSISTOR | | |
| Q101,102 | | | 2SD2222BT | TRANSISTOR | | 6 |
| Q101,102 | | | 2SD2255BT | TRANSISTOR | | 4 |
| Q101,102 | | | 2SD2255BT | TRANSISTOR | | 5 |
| Q103,104 | | | 2SB1470BT | TRANSISTOR | | 6 |
| Q103,104 | | | 2SB1493BT | TRANSISTOR | | 4 |

L:Scandinavia K:USA P:Canada R:Mexico
Y:PX(Far East, Hawaii) T:England E:Europe G:Germany
Y:AAFES(Europe) X:Australia M:Other Areas

S:Singapore made
W:Malaysia made

4:KR-694
5:KR-V5560
6:KR-V6060

⚠ indicates safety critical components

# KR-694/V5560/V6060 PARTS LIST

× New Parts
Parts without Parts No. are not supplied.
Les articles non mentionnés dans le Parts No. ne sont pas fournis.
Teile ohne Parts No. werden nicht geliefert.

**No.18**

| Ref. No. 参照番号 | Address 位置 | New Parts 新 | Parts No. 部品番号 | Description 部品名／規格 | Destination 仕向 | Remarks 備考 |
|---|---|---|---|---|---|---|
| C205 | | | CE04LW1C101M | ELECTRO 100UF 16WV | | |
| C207 | | | CK45F1H103Z | CERAMIC 0.010UF Z | | |
| C208,209 | | | CK45F1H473Z | CERAMIC 0.047UF Z | | |
| C210-213 | | | C91-0751-05 | CERAMIC 330PF K | | |
| C220-222 | | | CE04LW1V4R7M | ELECTRO 4.7UF 35WV | | |
| C223 | | | C90-3247-05 | ELECTRO 47UF 35WV | | |
| C301 | | | CF92FV1H271K | MF 270PF K | | |
| C302 | | | CE04LW1V100M | ELECTRO 10UF 35WV | TE | |
| C303,304 | | | CK45F1H103Z | CERAMIC 0.010UF Z | TE | |
| C305 | | | CE04LW1V100M | ELECTRO 10UF 35WV | TE | |
| C306,307 | | | CC45FCH1H270J | CERAMIC 27PF J | TE | |
| C308 | | | CE04LW1V100M | ELECTRO 10UF 35WV | TE | |
| C309,310 | | | CK45F1H103Z | CERAMIC 0.010UF Z | TE | |
| C311 | | | CE04LW1V470M | ELECTRO 47UF 35WV | TE | |
| C312 | | | CK45F1H103Z | CERAMIC 0.010UF Z | TE | |
| J1 ,2 | | | E63-0067-15 | PHONO JACK | | |
| J3 | | | E63-0068-15 | PHONO JACK | | |
| L1 | | | L40-1001-17 | SMALL FIXED INDUCTOR(10UH,K) | | |
| L201,202 | | | L40-1001-17 | SMALL FIXED INDUCTOR(10UH,K) | TE | |
| L203-205 | | | L40-1091-17 | SMALL FIXED INDUCTOR(1UH) | TE | |
| X1 | | | L78-0290-05 | RESONATOR (8MHZ) | | |
| X201 | | | L77-2002-05 | CRYSTAL RESONATOR(4.332MHZ) | TE | |
| X202 | | | L78-0503-05 | RESONATOR (4.00MHZ) | TE | |
| R51 | | | RN14BK2C3902F | RN 39.0K F 1/6W | | |
| R54 | | | RD14NB2E150J | RD 15 J 1/4W | | |
| R87 | | | RD14NB2E150J | RD 15 J 1/4W | | |
| R93 ,94 | | | RD14NB2E8R2J | RD 8.2 J 1/4W | | |
| R115,116 | | | RD14NB2E221J | RD 220 J 1/4W | | |
| R121,122 | | | RD14NB2E331J | RD 330 J 1/4W | | |
| R123,124 | | | RD14NB2E221J | RD 220 J 1/4W | | |
| R153,154 | | | RD14NB2E221J | RD 220 J 1/4W | | |
| R159,160 | | | RD14NB2E221J | RD 220 J 1/4W | | |
| R161,162 | | | RD14NB2E331J | RD 330 J 1/4W | | |
| R213 | | | RD14NB2C102J | RD 1.0K J 1/6W | | 6 |
| R217,218 | | | RD14NB2E100J | RD 10 J 1/4W | | |
| R309 | | | RS14KB3D331J | FL-PROOF RS 330 J 2W | TE | |
| VR1 | | | R29-5087-05 | POTENTIOMETER(100KX4) | | 6 |
| VR1 | | | R29-5088-05 | POTENTIOMETER(100KX4) | | 4 |
| VR1 | | | R29-5088-05 | POTENTIOMETER(100KX4) | | 5 |
| VR2 | | | R05-5060-05 | POTENTIOMETER(200K) | | |
| VR3 | | | R12-1617-05 | TRIMMING POT.(2.2K) | | |
| D3 -10 | | | HSS104 | DIODE | | |
| D3 -10 | | | 1SS133 | DIODE | | |
| D11 | | | HZS5.1N(B2) | ZENER DIODE | | |
| D11 | | | RD5.1ES(B2) | ZENER DIODE | | |
| D21 ,22 | | | HSS104 | DIODE | | |
| D21 ,22 | | | 1SS133 | DIODE | | |
| D23 ,24 | | | HSS104A | DIODE | | |
| D23 ,24 | | | 1SS131 | DIODE | | |
| D25 ,26 | | | S5688B | DIODE | | |
| D25 ,26 | | | 1SR139-100 | DIODE | | |
| D27 ,28 | | | HSS104 | DIODE | | |
| D27 ,28 | | | 1SS133 | DIODE | | |

L:Scandinavia K:USA P:Canada R:Mexico
Y:PX(Far East, Hawaii) T:England E:Europe G:Germany
Y:AAFES(Europe) X:Australia M:Other Areas

S:Singapore made
W:Malaysia made

4:KR-694
5:KR-V5560
6:KR-V6060

⚠ indicates safety critical components

× New Parts
Parts without Parts No. are not supplied.
Les articles non mentionnés dans le Parts No. ne sont pas fournis.
Teile ohne Parts No. werden nicht geliefert.

**No.19**

| Ref. No. 参照番号 | Address 位置 | New Parts 新 | Parts No. 部品番号 | Description 部品名／規格 | Destination 仕向 | Remarks 備考 |
|---|---|---|---|---|---|---|
| D39 ,40 | | | HSS104A | DIODE | | |
| D39 ,40 | | | 1SS131 | DIODE | | |
| D41 | | | HZS4.7N(B2) | ZENER DIODE | | |
| D41 | | | RD4.7ES(B2) | ZENER DIODE | | |
| D42 | | | HSS104A | DIODE | | |
| D42 | | | 1SS131 | DIODE | | |
| D51 | | | HZS5.1N(B2) | ZENER DIODE | | 6 |
| D51 | | | RD5.1ES(B2) | ZENER DIODE | | 6 |
| D52 | | | HZS10N(B2) | ZENER DIODE | | |
| D52 | | | RD10ES(B2) | ZENER DIODE | | |
| D61 -66 | | | HSS104 | DIODE | | |
| D61 -66 | | | 1SS133 | DIODE | | |
| D301 | | | HZS5.1N(B2) | ZENER DIODE | TE | |
| D301 | | | RD5.1ES(B2) | ZENER DIODE | TE | |
| IC1 | | | NJM4580D-D | IC(OP AMP X2) | | |
| IC2 | | | NJU7313L | IC(ANALOG SWITCH) | | |
| IC3 | | | NJU7311L | IC(ANALOG SWITCH) | | |
| IC4 | | | LA2785 | IC(DOLBY PRO LOGIC DECODER IC) | | |
| IC5 | | | LV1010 | DI BI-POLAR IC | | |
| IC7 ,8 | | | NJM4580D-D | IC(OP AMP X2) | | |
| IC9 | | | TA8409S | IC(MOTOR CONTROL) | | |
| IC11,12 | | | NJM4565L | IC(OP AMP X2) | | |
| IC201 | | | TDA7330B | IC(RDS DEMODULATOR) | TE | |
| IC202 | | | LC6543H-4600 | IC | TE | |
| Q1 ,2 | | | DTC124ES | DIGITAL TRANSISTOR | | |
| Q1 ,2 | | | UN4212 | TRANSISTOR | | |
| Q4 | | | DTC124ES | DIGITAL TRANSISTOR | | |
| Q4 | | | UN4212 | TRANSISTOR | | |
| Q11 -14 | | | 2SA992(F,E) | TRANSISTOR | | |
| Q15 -18 | | | 2SC2631(R,S) | TRANSISTOR | | |
| Q19 ,20 | | | 2SA1123(R,S) | TRANSISTOR | | |
| Q33 -36 | | | 2SA992(F,E) | TRANSISTOR | | |
| Q37 -40 | | | 2SC2631(R,S) | TRANSISTOR | | |
| Q41 ,42 | | | 2SA1123(R,S) | TRANSISTOR | | |
| Q43 | | | 2SA933S(Q,R) | TRANSISTOR | | |
| Q44 -47 | | | 2SC2878(B) | TRANSISTOR | | |
| Q48 | | | 2SC1740S(Q,R) | TRANSISTOR | | |
| Q48 | | | 2SC2785(F,E) | TRANSISTOR | | |
| Q49 | | | DTC124ES | DIGITAL TRANSISTOR | | |
| Q49 | | | UN4212 | TRANSISTOR | | |
| Q51 ,52 | | | 2SC1740S(Q,R) | TRANSISTOR | | |
| Q51 ,52 | | | 2SC2785(F,E) | TRANSISTOR | | |
| Q53 | | | 2SC3940A(R,S) | TRANSISTOR | | |
| Q54 | | | 2SC2878(B) | TRANSISTOR | | |

## DISPLAY UNIT(X14-388X-XX)

| | | | | | | |
|---|---|---|---|---|---|---|
| D41 ,42 | | | B30-2430-05 | LED | | 6 |
| D43 | | | B30-2461-05 | LED(RED,5ﾏﾙ) | | |
| D46 | | | B30-2430-05 | LED | | 6 |
| D48 | | | B30-2461-05 | LED(RED,5ﾏﾙ) | | 5 |
| D49 | | | B30-2461-05 | LED(RED,5ﾏﾙ) | | 4 |
| C1 | | | C90-3224-05 | ELECTRO 4.7UF 16WV | | |
| C2 | | | C90-3253-05 | ELECTRO 1UF 50WV | | |
| C3 | | | C90-1827-05 | BACKUP 0.047F 5.5WV | | |
| C4 | | | CE04LW1A101M | ELECTRO 100UF 10WV | | |
| C5 ,6 | | | CE04LW1V4R7M | ELECTRO 4.7UF 35WV | | |

L:Scandinavia K:USA P:Canada R:Mexico
Y:PX(Far East, Hawaii) T:England E:Europe G:Germany
Y:AAFES(Europe) X:Australia M:Other Areas

S:Singapore made
W:Malaysia made

4:KR-694
5:KR-V5560
6:KR-V6060

⚠ indicates safety critical components

# KR-694/V5560/V6060

## PARTS LIST

* New Parts
Parts without Parts No. are not supplied
Les articles non mentionnés dans le Parts No. ne sont pas fournis.
Teile ohne Parts No. werden nicht geliefert.

**No.16**

| Ref. No. 参照番号 | Address 位置 | New Parts 新 | Parts No. 部品番号 | Description 部品名／規格 | | | Destination 仕向 | Remarks 備考 |
|---|---|---|---|---|---|---|---|---|
| Q103,104 | | | 2SB1493BT | TRANSISTOR | | | | 5 |
| Q105,106 | | | 2SC4137F19(V,W) | TRANSISTOR | | | | |
| ⚠ Q107,108 | | | 2SD2255BT | TRANSISTOR | | | | |
| ⚠ Q109,110 | | | 2SB1493BT | TRANSISTOR | | | | |
| Q111,112 | | | 2SC4137F19(V,W) | TRANSISTOR | | | | |
| **AUDIO UNIT(X09-394X-XX)** | | | | | | | | |
| C1 -4 | | | C91-0749-05 | CERAMIC | 220PF | K | TE | |
| C5 ,6 | | | C91-0749-05 | CERAMIC | 220PF | K | | |
| C7 ,8 | | | C91-0749-05 | CERAMIC | 220PF | K | TE | |
| C9 ,10 | | | C91-0749-05 | CERAMIC | 220PF | K | | |
| C11 ,12 | | | C91-0749-05 | CERAMIC | 220PF | K | TE | |
| C13 ,14 | | | C91-0749-05 | CERAMIC | 220PF | K | | |
| C15 ,16 | | | C91-0749-05 | CERAMIC | 220PF | K | TE | |
| C17 ,18 | | | CE04LW1H010M | ELECTRO | 1.0UF | 50WV | | |
| C19 ,20 | | | C91-0749-05 | CERAMIC | 220PF | K | | |
| C21 ,22 | | | C91-0729-05 | CERAMIC | 22PF | J | | |
| C23 ,24 | | | CE04LW1C220M | ELECTRO | 22UF | 16WV | | |
| C25 ,26 | | | CE04LW1C470M | ELECTRO | 47UF | 16WV | | |
| C27 ,28 | | | CC45FSL1H101J | CERAMIC | 100PF | J | | |
| C29 | | | CK45FF1H472Z | CERAMIC | 4700PF | Z | | |
| C30 ,31 | | | CK45FF1H103Z | CERAMIC | 0.010UF | Z | | |
| C32 ,33 | | | CE04LW1C220M | ELECTRO | 22UF | 16WV | | |
| C34 | | | CK45FB1H102K | CERAMIC | 1000PF | K | | |
| C41 | | | CQ92FM1H103J | MYLAR | 0.010UF | J | | |
| C42 | | | CQ92FM1H222J | MYLAR | 2200PF | J | | |
| C43 | | | CE04LW1A221M | ELECTRO | 220UF | 10WV | | |
| C44 | | | CQ92FM1H333J | MYLAR | 0.033UF | J | | |
| C45 | | | CQ92FM1H152J | MYLAR | 1500PF | J | | |
| C46 | | | CQ92FM1H333J | MYLAR | 0.033UF | J | | |
| C47 | | | CF92FV1H105J | MF | 1.0UF | J | | |
| C48 | | | CE04LW1A221M | ELECTRO | 220UF | 10WV | | |
| C49 | | | CE04LW1V100M | ELECTRO | 10UF | 35WV | | |
| C50 | | | CE04LW1H2R2M | ELECTRO | 2.2UF | 50WV | | |
| C51 | | | CE04LW1V100M | ELECTRO | 10UF | 35WV | | |
| C53 | | | CE04LW1V100M | ELECTRO | 10UF | 35WV | | |
| C55 | | | CF92FV1H824J | MF | 0.82UF | J | | |
| C56 | | | CF92FV1H474J | MF | 0.47UF | J | | |
| C57 | | | CE04LW1A470M | ELECTRO | 47UF | 10WV | | |
| C58 ,59 | | | CQ92FM1H104J | MYLAR | 0.10UF | J | | |
| C60 | | | CE04LW1HR47M | ELECTRO | 0.47UF | 50WV | | |
| C61 | | | CE04LW1V4R7M | ELECTRO | 4.7UF | 35WV | | |
| C62 | | | CE04LW1HR47M | ELECTRO | 0.47UF | 50WV | | |
| C63 | | | CE04LW1V4R7M | ELECTRO | 4.7UF | 35WV | | |
| C64 | | | CF92FV1H154J | MF | 0.15UF | J | | |
| C65 | | | CE04LW1H3R3M | ELECTRO | 3.3UF | 50WV | | |
| C66 ,67 | | | CF92FV1H154J | MF | 0.15UF | J | | |
| C68 | | | CE04LW1H3R3M | ELECTRO | 3.3UF | 50WV | | |
| C69 | | | CF92FV1H154J | MF | 0.15UF | J | | |
| C70 | | | CE04LW1V4R7M | ELECTRO | 4.7UF | 35WV | | |
| C71 | | | CE04LW1HR47M | ELECTRO | 0.47UF | 50WV | | |
| C72 | | | CE04LW1V4R7M | ELECTRO | 4.7UF | 35WV | | |
| C73 | | | CE04LW1HR47M | ELECTRO | 0.47UF | 50WV | | |
| C74 ,75 | | | CQ92FM1H104J | MYLAR | 0.10UF | J | | |
| C76 ,77 | | | CE04LW1H010M | ELECTRO | 1.0UF | 50WV | | |
| C78 | | | CE04LW1A221M | ELECTRO | 220UF | 10WV | | |

L:Scandinavia K:USA P:Canada R:Mexico
Y:PX(Far East, Hawaii) T:England E:Europe G:Germany
Y:AAFES(Europe) X:Australia M:Other Areas

S:Singapore made
W:Malaysia made

4:KR-694
5:KR-V5560
6:KR-V6060

⚠ indicates safety critical components

**No.17**

| Ref. No. 参照番号 | Address 位置 | New Parts 新 | Parts No. 部品番号 | Description 部品名／規格 | | | Destination 仕向 | Remarks 備考 |
|---|---|---|---|---|---|---|---|---|
| C79 -82 | | | CE04LW1V100M | ELECTRO | 10UF | 35WV | | |
| C83 | | | CE04LW1A221M | ELECTRO | 220UF | 10WV | | |
| C84 | | | CQ92FM1H473J | MYLAR | 0.047UF | J | | |
| C85 | | | CQ92FM1H223J | MYLAR | 0.022UF | J | | |
| C86 | | | CE04LW1C470M | ELECTRO | 47UF | 16WV | | |
| C87 | | | CE04LW1A101M | ELECTRO | 100UF | 10WV | | |
| C89 | | | CK45FB1H102K | CERAMIC | 1000PF | K | | |
| C91 | | | CK45FF1H223Z | CERAMIC | 0.022UF | Z | | |
| C92 | | | CE04LW1C470M | ELECTRO | 47UF | 16WV | | |
| C93 | | | CQ92FM1H104J | MYLAR | 0.10UF | J | | |
| C95 | | | C91-0757-05 | CERAMIC | 1000PF | K | | |
| C96 | | | CF92FV1H681J | MF | 680PF | J | | |
| C97 ,98 | | | CE04LW1V100M | ELECTRO | 10UF | 35WV | | |
| C99 ,100 | | | CE04LW1H010M | ELECTRO | 1.0UF | 50WV | | |
| C101,102 | | | C91-0749-05 | CERAMIC | 220PF | K | | |
| C103,104 | | | C91-0729-05 | CERAMIC | 22PF | J | | |
| C105,106 | | | C91-0745-05 | CERAMIC | 100PF | K | TE | |
| C107,108 | | | C91-0737-05 | CERAMIC | 47PF | J | | |
| C109,110 | | | CE04LW1V100M | ELECTRO | 10UF | 35WV | | |
| C120 | | | C91-0755-05 | CERAMIC | 680PF | K | | |
| C121,122 | | | C91-0735-05 | CERAMIC | 39PF | J | TE | |
| C123,124 | | | CE04LW1V100M | ELECTRO | 10UF | 35WV | | |
| C125,126 | | | C91-0749-05 | CERAMIC | 220PF | K | | |
| C127,128 | | | CE04LW1A101M | ELECTRO | 100UF | 10WV | | |
| C129,130 | | | C91-0757-05 | CERAMIC | 1000PF | K | | |
| C131,132 | | | CQ92FM1H123J | MYLAR | 0.012UF | J | | |
| C133,134 | | | CQ92FM1H332J | MYLAR | 3300PF | J | | |
| C135,136 | | | CE04LW1V4R7M | ELECTRO | 4.7UF | 35WV | | |
| C137,138 | | | C91-0745-05 | CERAMIC | 100PF | K | TE | |
| C139 | | | CQ93HP2A103J | MYLAR | 0.010UF | J | | |
| C151 | | | C90-3253-05 | ELECTRO | 1UF | 50WV | | |
| C152 | | | CE04LW1H010M | ELECTRO | 1.0UF | 50WV | | |
| C153,154 | | | CC45FSL1H221J | CERAMIC | 220PF | J | | |
| C155-158 | | | CC45FSL1H101J | CERAMIC | 100PF | J | | |
| C159 | | | C90-3222-05 | ELECTRO | 100UF | 10WV | | |
| C160 | | | CE04LW1A101M | ELECTRO | 100UF | 10WV | | |
| C161,162 | | | CC45FSL1H100D | CERAMIC | 10PF | D | | |
| C163,164 | | | CE04LW2A010M | ELECTRO | 1.0UF | 100WV | | |
| C165,166 | | | CC45FSL1H221J | CERAMIC | 220PF | J | | |
| C167,168 | | | CC45FSL1H020C | CERAMIC | 2.0PF | C | KPMXYR | |
| C167,168 | | | CC45FSL1H070C | CERAMIC | 7.0PF | C | TE | |
| C169,170 | | | CC45FSL2H330J | CERAMIC | 33PF | J | | |
| C171,172 | | | CE04LW1C470M | ELECTRO | 47UF | 16WV | | |
| C173 | | | CE04LW1C220M | ELECTRO | 22UF | 16WV | | |
| C181,182 | | | CE04LW1H010M | ELECTRO | 1.0UF | 50WV | | |
| C183,184 | | | CC45FSL1H221J | CERAMIC | 220PF | J | | |
| C185-188 | | | CC45FSL1H101J | CERAMIC | 100PF | J | | |
| C189,190 | | | CE04LW1A470M | ELECTRO | 47UF | 10WV | | |
| C191,192 | | | CC45FSL1H680J | CERAMIC | 68PF | J | | |
| C193,194 | | | CC45FSL1H221J | CERAMIC | 220PF | J | | |
| C195,196 | | | CC45FSL1H020C | CERAMIC | 2.0PF | C | | |
| C197,198 | | | CC45FSL2H680J | CERAMIC | 68PF | J | | |
| C200 | | | CE04LW1C220M | ELECTRO | 22UF | 16WV | | |
| C201,202 | | | CE04LW1V100M | ELECTRO | 10UF | 35WV | | |
| C203,204 | | | CQ92FM1H333J | MYLAR | 0.033UF | J | | |

L:Scandinavia K:USA P:Canada R:Mexico
Y:PX(Far East, Hawaii) T:England E:Europe G:Germany
Y:AAFES(Europe) X:Australia M:Other Areas

S:Singapore made
W:Malaysia made

4:KR-694
5:KR-V5560
6:KR-V6060

⚠ indicates safety critical components

# KR-694/V5560/V6060
## PARTS LIST

✱ New Parts
Parts without Parts No. are not supplied.
Les articles non mentionnés dans le Parts No. ne sont pas fournis.
Teile ohne Parts No. werden nicht geliefert.

**No.20**

| Ref. No. 参照番号 | Address 位置 | New Parts 新 | Parts No. 部品番号 | Description 部品名／規格 | Destination 仕向 | Remarks 備考 |
|---|---|---|---|---|---|---|
| C7 | | | C90-3211-05 | ELECTRO 33UF 6.3WV | | |
| C8 | | | CE04LW1H330M | ELECTRO 33UF 50WV | | |
| C9 | | | C91-0769-05 | CERAMIC 0.01UF K | | |
| C10 | | | C91-0085-05 | CERAMIC 0.022UF N | | |
| C11 | | | C91-0769-05 | CERAMIC 0.01UF K | | |
| C12 ,13 | | | CQ92FM1H223J | MYLAR 0.022UF J | | |
| C14 | | | C90-3212-05 | ELECTRO 47UF 6.3WV | | |
| C15 | | | C91-0769-05 | CERAMIC 0.01UF K | | |
| C21 ,22 | | | CC45SL1H221J | CERAMIC 220PF J | | |
| C23 ,24 | | | CE04LW1H3R3M | ELECTRO 3.3UF 50WV | | |
| C25 ,26 | | | CQ92FM1H563J | MYLAR 0.056UF J | | |
| C27 | | | CE04LW1H010M | ELECTRO 1.0UF 50WV | | |
| C28 | | | C90-3228-05 | ELECTRO 47UF 16WV | | |
| C29 ,30 | | | C91-0737-05 | CERAMIC 47PF J | | |
| C31 ,32 | | | C91-0754-05 | CERAMIC 560PF J | | |
| C33 | | | C90-3253-05 | ELECTRO 1UF 50WV | | |
| C37 ,38 | | | C90-3224-05 | ELECTRO 4.7UF 16WV | | |
| C39 | | | C90-3225-05 | ELECTRO 10UF 16WV | | |
| C40 | | | CE04LW1V100M | ELECTRO 10UF 35WV | | |
| C41 ,42 | | | CF92FV1H393J | MF 0.039UF J | | |
| C43 ,44 | | | CE04LW1E470M | ELECTRO 47UF 25WV | | |
| X1 | | | L78-0267-05 | RESONATOR (4.194MHZ) | | |
| CP1 | | | R90-0492-05 | MULTI-COMP 100KX8 J 1/6W | | |
| CP2 | | | R90-0832-05 | MULTI-COMP 4.7KX3 J 1/6W | | |
| CP4 | | | R90-0856-05 | MULTI-COMP 10KX5 J 1/6W | | |
| R22 ,23 | | | RD14NB2E221J | RD 220 J 1/4W | | |
| R69 ,70 | | | RD14NB2E121J | RD 120 J 1/4W | | |
| VR1 ,2 | | | R10-5076-05 | POTENTIOMETER(100K X2) | | |
| S1 -35 | | | S40-1064-05 | PUSH SWITCH | | |
| S36 -38 | | | S40-1064-05 | PUSH SWITCH | TE | |
| S40 | | | T99-0547-05 | ENCODER (INPUT SELECTOR) | | |
| D1 -20 | | | HSS104 | DIODE | | |
| D1 -20 | | | 1SS133 | DIODE | | |
| D25 | | | HZS6.2N(B2) | ZENER DIODE | | |
| D25 | | | RD6.2ES(B2) | ZENER DIODE | | |
| D26 | | | HZS2.7N(B2) | ZENER DIODE | | |
| D26 | | | RD2.7ES(B2) | ZENER DIODE | | |
| D27 | | | HZS11N(B2) | ZENER DIODE | | |
| D27 | | | RD11ES(B2) | ZENER DIODE | | |
| D32 | | | HSS104 | DIODE | | 6 |
| D32 | | | 1SS133 | DIODE | | 6 |
| D33 | | | HSS104 | DIODE | TE | |
| D33 | | | 1SS133 | DIODE | TE | |
| D34 | | | HSS104 | DIODE | X | |
| D34 | | | 1SS133 | DIODE | X | |
| D35 | | | HSS104 | DIODE | YMXTE | |
| D35 | | | 1SS133 | DIODE | YMXTE | |
| D36 | | | HSS104 | DIODE | YM | |
| D36 | | | 1SS133 | DIODE | YM | |
| BD1 | | | 11-MT-92GK | INDICATOR TUBE | | |
| IC1 | | | UPD78043GF-073 | MI-COM IC | KPYMXR | |

L:Scandinavia K:USA P:Canada R:Mexico
Y:PX(Far East, Hawaii) T:England E:Europe G:Germany
Y:AAFES(Europe) X:Australia M:Other Areas

S:Singapore made
W:Malaysia made

4:KR-694
5:KR-V5560
6:KR-V6060

⚠ indicates safety critical components

✱ New Parts
Parts without Parts No. are not supplied.
Les articles non mentionnés dans le Parts No. ne sont pas fournis.
Teile ohne Parts No. werden nicht geliefert.

**No.21**

| Ref. No. 参照番号 | Address 位置 | New Parts 新 | Parts No. 部品番号 | Description 部品名／規格 | Destination 仕向 | Remarks 備考 |
|---|---|---|---|---|---|---|
| IC1 | | | UPD78044GF-075 | MI-COM IC | TE | |
| IC2 | | | S-80740AL | IC(VOLTAGE DETECTOR). | | |
| IC3 | | | NJM4580D-D | IC(OP AMP X2) | | |
| Q1 ,2 | | | 2SC1740S(Q,R) | TRANSISTOR | | |
| Q1 ,2 | | | 2SC2785(F,E) | TRANSISTOR | | |
| Q3 | | | 2SA1175(F,E) | TRANSISTOR | YM | |
| Q3 | | | 2SA933S(Q,R) | TRANSISTOR | YM | |
| Q5 ,6 | | | 2SC1740S(Q,R) | TRANSISTOR | | |
| Q5 ,6 | | | 2SC2785(F,E) | TRANSISTOR | | |
| Q7 | | | 2SC1845(F,E) | TRANSISTOR | | |
| Q8 | | | DTA124ES | DIGITAL TRANSISTOR | | |
| Q8 | | | UN4112 | TRANSISTOR | | |
| Q9 | | | DTC124ES | DIGITAL TRANSISTOR | | |
| Q9 | | | UN4212 | TRANSISTOR | | |
| A1 | | | W02-1046-05 | ELECTRIC CIRCUIT MODULE | | |
| A1 | | | W02-1153-05 | ELECTRIC CIRCUIT MODULE | | |
| A1 | | | W02-1174-05 | ELECTRIC CIRCUIT MODULE | | |

L:Scandinavia K:USA P:Canada R:Mexico
Y:PX(Far East, Hawaii) T:England E:Europe G:Germany
Y:AAFES(Europe) X:Australia M:Other Areas

S:Singapore made
W:Malaysia made

4:KR-694
5:KR-V5560
6:KR-V6060

⚠ indicates safety critical components

# KR-694/V5560/V6060

## SPECIFICATIONS

### For U.S.A and Canada (KR-694/V5560)

*Audio section*

Rated power output at the STEREO operation

| |
|---|
| 70 watts per channel minimum RMS, both channels driven at 8 Ω, from 20 Hz to 20,000 Hz with no more than 0.06 % total harmonic distortions. (FTC) |

Power output at the Surround operation
Front (1 kHz, 0.9 % T.H.D. at 8 Ω) ..... 70 W + 70 W
Center (1 kHz, 0.9 % T.H.D. at 8 Ω) ..... 70 W
Rear (1 kHz, 0.9 % T.H.D. at 8 Ω) ..... 20 W + 20 W

Total harmonic distortion (1 kHz, 8 Ω) ..... 0.03 % at 50 W
Signal to noise ratio (IHF A)
PHONO (MM) ..... 75 dB
CD, TAPE, VIDEO ..... 100 dB
Input sensitivity / impedance
PHONO (MM) ..... 2.5 mV / 47 kΩ
CD, TAPE, VIDEO ..... 200 mV / 47 kΩ
Tone controls
BASS ..... ± 10 dB (at 100 Hz)
TREBLE ..... ± 10 dB (at 10 kHz)
Loudness control at – 30 dB level ..... + 6 dB (100 Hz)

*Video section*

VIDEO inputs / outputs(Composite) ..... 1 Vp - p / 75 Ω

*FM Tuner section*

Tuning frequency range ..... 87.5 MHz ~ 108 MHz
Usable sensitivity (IHF) ..... 13.2 dBf (1.2 μV at 75 Ω)
50 dB quieting sensitivity
STEREO ..... 41.2 dBf (3.2 μV at 75 Ω)
Total harmonic distortion at 1 kHz
MONO ..... 0.6 %
STEREO ..... 0.7 %
Signal to noise ratio at 65 dBf (IHF)
MONO ..... 75 dB
STEREO ..... 68 dB
Selectivity (IHF ± 400 kHz) ..... 50 dB
Stereo separation (IHF at 1 kHz) ..... 40 dB
Frequency response ..... 30 Hz ~ 15 kHz, + 0.5 dB, – 3.0 dB

*AM Tuner section*

Tuning frequency range ..... 530 kHz ~ 1,700 kHz
Usable sensitivity ..... 12 μV / (500 μV / m)
Total harmonic distortion ..... 0.7 %
Signal to noise ratio ..... 48 dB
Selectivity ..... 30 dB

*General*

Power consumption ..... 3 A
AC outlet
SWITCHED ..... 2: (total 200 W, 1.6 A max.)
Dimensions ..... W:440 mm (17-5/16")
H :143 mm (5-5/8")
D :334 mm (13-1/8")
Weight (net) ..... 9.5 kg (20.9 lb)

### For other countries(KR-694/V5560)

*Audio section*

Rated power output at the STEREO operation
(EIAJ) 1 kHz, 10 % T.H.D., at 8 Ω ..... 100 W + 100 W
(IHF '66) from 20 Hz to 20 kHz,
0.06% T.H.D., at 8 Ω ..... 70 W + 70 W
Power output at the Surround operation
Front (1 kHz, 0.9 % T.H.D. at 8 Ω) ..... 70 W + 70 W
Center (1 kHz, 0.9 % T.H.D. at 8 Ω) ..... 70 W
Rear (1 kHz, 0.9 % T.H.D. at 8 Ω) ..... 20 W + 20 W
Total harmonic distortion ..... (1 kHz, 8 Ω) 0.03 % at 50 W
Signal to noise ratio (IHF'66)
PHONO (MM) ..... 75 dB
CD, TAPE, VIDEO ..... 100 dB
Input sensitivity / impedance
PHONO (MM) ..... 2.5 mV / 47 kΩ
CD, TAPE, VIDEO ..... 200 mV / 47kΩ
Tone controls
BASS ..... ± 10 dB (at 100 Hz)
TREBLE ..... ± 10 dB (at 10 kHz)
Loudness control at – 30 dB level ..... + 6 dB (100 Hz)

*Video section*

VIDEO inputs / outputs (Composite) ..... 1 Vp - p / 75 Ω

*FM Tuner section*

Tuning frequency range ..... 87.5 MHz ~ 108 MHz
Usable sensitivity (IHF) ..... 13.2 dBf (1.2 μV at 75 Ω)
50 dB quieting sensitivity
STEREO ..... 41.2 dBf (3.2 μV at 75 Ω)
Total harmonic distortion at 1 kHz
MONO ..... 0.6 %
STEREO ..... 0.7 %
Signal to noise ratio at 65 dBf (IHF)
MONO ..... 75 dB
STEREO ..... 68 dB
Selectivity (IHF ± 400 kHz) ..... 50 dB
Stereo separation (IHF at 1 kHz) ..... 40 dB
Frequency response ..... 30 Hz ~ 15 kHz, + 0.5 dB, – 3.0 dB

*AM Tuner section*

Tuning frequency range
9 kHz ..... 531 kHz ~ 1,602 kHz
10 kHz ..... 530 kHz ~ 1,610 kHz
Usable sensitivity ..... 12 μV / (500 μV / m)
Total harmonic distortion ..... 0.7 %
Signal to noise ratio ..... 48 dB
Selectivity ..... 30 dB

*General*

Power consumption ..... 260 W
AC outlet
SWITCHED ..... 2: (total 200 W max.)
(Except for Australia)
Dimensions ..... W:440 mm
H :143 mm
D :334 mm
Weight (net) ..... 9.5 kg

Note : KENWOOD follows a policy of continuous advancements in development. For this reason specifications may be changed without notice.

# KR-694/V5560/V6060

## SPECIFICATIONS

### U.S.A., Mexico and Canada(KR-V6060)

#### *Audio section*

**Rated power output at the STEREO operation**

> 100 watts per channel minimum RMS, both channels driven at 8 Ω, from 20 Hz to 20,000 Hz with no more than 0.06% total harmonic distortions. (FTC)

Power output at the Surround operation
- Front (1 kHz, 0.9% T.H.D. at 8 Ω) ..... 70 W + 70 W
- Center (1 kHz, 0.9% T.H.D. at 8 Ω) ..... 70 W
- Rear (1 kHz, 0.9% T.H.D. at 8 Ω) ..... 20 W + 20 W

Total harmonic distortion (1 kHz, 8 Ω) ..... 0.03% at 50 W
Signal to noise ratio (IHF A)
- PHONO (MM) ..... 75 dB
- CD, TAPE, VIDEO ..... 100 dB

Input sensitivity / impedance
- PHONO (MM) ..... 2.5 mV / 47 kΩ
- CD, TAPE, VIDEO ..... 200 mV / 47 kΩ

Tone controls
- BASS ..... ±10 dB (at 100 Hz)
- TREBLE ..... ±10 dB (at 10 kHz)

Loudness control at – 30 dB level ..... + 8 dB (100 Hz)

#### *Video section*

VIDEO inputs / outputs(Composite) ..... 1 Vp-p / 75 Ω

#### *FM Tuner section*

Tuning frequency range ..... 87.5 MHz~108 MHz
Usable sensitivity (IHF) ..... 13.2 dBf (1.2 μV at 75 Ω)
50 dB quieting sensitivity
- STEREO ..... 41.2 dBf (3.2 μV at 75 Ω)

Total harmonic distortion at 1 kHz
- MONO ..... 0.6%
- STEREO ..... 0.7%

Signal to noise ratio at 65 dBf (IHF)
- MONO ..... 75 dB
- STEREO ..... 68 dB

Selectivity (IHF ±400 kHz) ..... 50 dB
Stereo separation (IHF at 1 kHz) ..... 40 dB
Frequency response ..... 30 Hz~15 kHz, +0.5 dB,– 3.0 dB

#### *AM Tuner section*

Tuning frequency range ..... 530 kHz~1,700 kHz
Usable sensitivity ..... 12 μV / (500 μV / m)
Total harmonic distortion ..... 0.7 %
Signal to noise ratio ..... 48 dB
Selectivity ..... 30 dB

#### *General*

Power consumption ..... 3 A
AC outlet
- SWITCHED ..... 2: (total 200 W, 1.6 A max.)

Dimensions ..... W: 440 mm (17-5/16")
H: 143 mm (5-5/8")
D: 334 mm (13-1/8")

Weight (net) ..... 9.5 kg (20.9 lb)

### Other countries(KR-V6060)

#### *Audio section*

Rated power output at the STEREO operation
(EIAJ) 1 kHz, 10 % THD at 8 Ω ..... 135 W + 135 W
(IHF '66) from 20 Hz to 20 kHz,
0.06% T.H.D., at 8 Ω ..... 100 W + 100 W

Power output at the Surround operation
- Front (1 kHz, 0.9% T.H.D. at 8 Ω) ..... 70 W + 70 W
- Center (1 kHz, 0.9% T.H.D. at 8 Ω) ..... 70 W
- Rear (1 kHz, 0.9% T.H.D. at 8 Ω) ..... 20 W + 20 W

Total harmonic distortion (1 kHz, 8 Ω) 0.03% at 50 W
Signal to noise ratio (IHF'66)
- PHONO (MM) ..... 75 dB
- CD, TAPE, VIDEO ..... 100 dB

Input sensitivity / impedance
- PHONO (MM) ..... 2.5 mV / 47 kΩ
- CD, TAPE, VIDEO ..... 200 mV / 47kΩ

Tone controls
- BASS ..... ±10 dB (at 100 Hz)
- TREBLE ..... ±10 dB (at 10 kHz)

Loudness control at – 30 dB level ..... + 8 dB (100 Hz)

#### *Video section*

VIDEO inputs / outputs(Composite) ..... 1 Vp-p / 75 Ω

#### *FM Tuner section*

Tuning frequency range ..... 87.5 MHz~108 MHz
Usable sensitivity (IHF) ..... 13.2 dBf (1.2 μV at 75 Ω)
50 dB quieting sensitivity
- STEREO ..... 41.2 dBf (3.2 μV at 75 Ω)

Total harmonic distortion at 1 kHz
- MONO ..... 0.6 %
- STEREO ..... 0.7 %

Signal to noise ratio at 65 dBf (IHF)
- MONO ..... 75 dB
- STEREO ..... 68 dB

Selectivity (IHF ± 400 kHz) ..... 50 dB
Stereo separation (IHF at 1 kHz) ..... 40 dB
Frequency response ..... 30 Hz ~ 15 kHz, + 0.5 dB, – 3.0 dB

#### *AM Tuner section*

Tuning frequency range
- 9 kHz ..... 531 kHz ~ 1,602 kHz
- 10 kHz ..... 530 kHz ~ 1,610 kHz

Usable sensitivity ..... 12 μV / (500 μV / m)
Total harmonic distortion ..... 0.7 %
Signal to noise ratio ..... 48 dB
Selectivity ..... 30 dB

#### *General*

Power consumption ..... 260 W
AC outlet
- SWITCHED ..... 2: ( total 200 W max.)
(Except for Australia)

Dimensions ..... W: 440 mm
H: 143 mm
D: 334 mm

Weight (net) ..... 9.5 kg

Note : KENWOOD follows a policy of continuous advancements in development. For this reason specifications may be changed without notice.

# KR-694/V5560/V6060


KENWOOD CORPORATION
Alive Mitake, 2-5, 1-chome Shibuya, Shibuya-ku, Tokyo 150, Japan
KENWOOD SERVICE CORPORATION
P.O. BOX 22745, 2201 East Dominguez St., Long Beach, CA 90801-5745, U.S.A.
KENWOOD ELECTRONICS CANADA INC.
6070 Kestrel Road, Mississauga, Ontario, Canada L5T 1S8
KENWOOD ELECTRONICS LATIN AMERICA S.A.
P.O. BOX 55-2791, Piso 6 Plaza Chase, Cl. 47 y Aquilino de la Guardia, Panama, Republic de Panama
TRIO-KENWOOD U.K. LIMITED
Kenwood House, Dwight Road, Watford, Herts, WD1 8EB, United Kingdom
KENWOOD ELECTRONICS BENELUX N.V.
Mechelsesteenweg 418 B-1930 Zaventem, Belgium
KENWOOD ELECTRONICS DEUTSCHLAND GMBH
Rembrücker Str. 15, 63150 Heusenstamm, Germany
TRIO-KENWOOD FRANCE S.A.
13 Boulevard Ney, 75018 Paris, France
KENWOOD ELECTRONICS ITALIA S.p.A.
Via G. Sirtori, 7/9 20129 Milano, Italy
KENWOOD ESPANA S.A.
Bolivia, 239-08020 Barcelona, Spain
KENWOOD ELECTRONICS AUSTRALIA PTY. LTD. (A.C.N. 001 499 074)
PO BOX 504, 8 Figtree Drive, Australia Centre, Homebush, N.S.W. 2140, Australia
KENWOOD & LEE ELECTRONICS, LTD.
Unit 3712-3724, Level 37 Tower 1, Metroplaza, 223 Hing Fong Road, Kwai Fong N.T. Hong Kong
KENWOOD ELECTRONICS SINGAPORE PTE LTD
No. 1 Genting Lane #07-00, Singapore, 1334